VILLAGE AT GRUENE CONDOMINIUMS

NEW BRAUNFELS, TEXAS

PUBLIC INFRASTRUCTURE PLANS

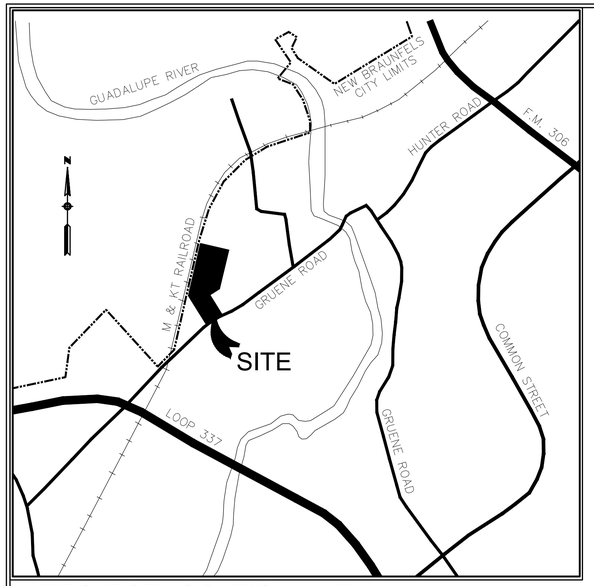

PROJECT LOCATION MAP SCALE: N.T.S.

PROJECT BENCHMARK

SITE TBM #1
SET RAILROAD SPIKE IN POWER POLE
N: 13815538.45
E: 2249823.11
ELEV: 670.45

SITE TBM #2
SET RAILROAD SPIKE IN POWER POLE
N: 13815293.73
E: 2249782.10
ELEV: 666.59

LEGAL DESCRIPTION

BEING A 14.866 ACRE TRACT OF LAND SITUATED IN THE J.M. VERAMENDI SURVEY NO. 1, ABSTRACT NO. 2, COMAL COUNTY, TEXAS AND BEING ALL OF A CALLED 10 ACRE TRACT OF LAND (TRACT I), AND ALL OF A CALLED 10 ACRE TRACT (TRACT II), LESS AND EXCEPT A CALLED 2 ACRE TRACT (TRACT III), AND A CALLED 3.222 ACRE TRACT (TRACT IV), AS DESCRIBED IN GENERAL WARRANTY DEED RECORDED IN DOCUMENT NO. 201706002953 OF THE OFFICIAL PUBLIC RECORDS OF COMAL COUNTY, TEXAS.

PLEASE NOTE: NBU REQUIRES GPS POINTS FOR CERTAIN ELECTRIC, WATER AND WASTEWATER ATTRIBUTES, SOME OF WHICH MUST BE TAKEN PRIOR TO BACKFILL DURING CONSTRUCTION.

GPS POINTS SHALL BE REQUIRED FROM THE DEVELOPER'S CONTRACTOR OR ENGINEER. A MINIMUM OF THREE COORDINATE POINTS FOR GEOREFERENCING SHALL BE REQUIRED. THE WATER AND WASTEWATER GPS POINTS SHALL BE TO SURVEY GRADE. THE ELECTRIC GPS POINTS SHALL BE TO MAP GRADE.

WATER
VERTICAL BENDS AND EDGE OF STEEL CASING (IF APPLICABLE) PRIOR TO BACKFILL
HORIZONTAL BENDS PRIOR TO BACKFILL
TEES PRIOR TO BACKFILL
FITTINGS (REDUCERS AND COUPLINGS) PRIOR TO BACKFILL
FIRE HYDRANTS (TOP OF FLANGE)
VALVES
METERS (TOP CENTER OF BOX)
BLOW OFF ASSEMBLY
CORNER SLAB OF WATER TANK & GATE VALVE ON WATER TANK

WASTEWATER
MANHOLES
CLEANOUTS
CORNER SLAB OF LIFT STATION

ELECTRIC
POLES
TRANSFORMERS, BOTH ABOVE AND UNDERGROUND (FRONT LOCK)
PULL BOXES
STREET LIGHTS

COORDINATE GPS REQUIREMENTS WITH NBU INSPECTOR

GENERAL NOTES:

1. IF CONSTRUCTION HAS NOT COMMENCED WITHIN ONE-YEAR OF CITY APPROVAL FOR CONSTRUCTION INSPECTION, THAT APPROVAL IS NO LONGER VALID.
2. THE MOST CURRENT EDITIONS OF THE CITY OF SAN ANTONIO STANDARD SPECIFICATIONS AND THE TEXAS DEPARTMENT OF TRANSPORTATION STANDARD SPECIFICATIONS FOR CONSTRUCTION OF HIGHWAYS, STREETS AND BRIDGES SHALL BE FOLLOWED FOR ALL CONSTRUCTION EXCEPT AS AMENDED BY THE CITY OF NEW BRAUNFELS STANDARD DETAILS.
3. ALL RESPONSIBILITY FOR THE ADEQUACY OF THESE PLANS REMAINS WITH THE ENGINEER OF RECORD. IN ACCEPTING THESE PLANS, THE CITY OF NEW BRAUNFELS MUST RELY UPON THE ADEQUACY OF THE WORK OF THE ENGINEER IN RECORD.
4. PRIOR TO THE START OF CONSTRUCTION THE CONTRACTOR SHALL CONTACT THE CITY OF NEW BRAUNFELS TO SET A PRE-CONSTRUCTION MEETING. A 48-HOUR ADVANCED NOTIFICATION IS REQUIRED FOR ALL INSPECTION AND MEETING REQUESTS.

   4.1 ALL INSPECTIONS ARE TO BE CALLED IN AT 830-221-4068 OR,
   4.2 FAXED IN AT 830-608-2117 OR,
   4.3 E-MAILED AT INSPECTIONS@NBTEXAS.ORG.

5. IT IS THE CONTRACTOR'S RESPONSIBILITY TO SEE THAT ALL TEMPORARY AND PERMANENT TRAFFIC CONTROL DEVICES ARE PROPERLY INSTALLED AND MAINTAINED IN ACCORDANCE WITH THE PLANS AND LATEST EDITION OF THE TEXAS MANUAL ON UNIFORM TRAFFIC CONTROL DEVICES. IF THE NEED ARISES, ADDITIONAL TEMPORARY TRAFFIC CONTROL DEVICES MAY BE ORDERED BY THE ENGINEERING REPRESENTATIVE AT THE CONTRACTOR'S EXPENSE.
6. DRAINAGE IMPROVEMENTS SUFFICIENT TO MITIGATE OFFSITE IMPACT OF CONSTRUCTION MUST BE COMPLETED AND IN PLACE PRIOR TO ADDING IMPERVIOUS COVER TO THE SITE.
7. THIS DEVELOPMENT IS A TYPE 3 DEVELOPMENT.
8. NO PORTION OF THE SUBDIVISION IS LOCATED WITHIN ANY SPECIAL FLOOD HAZARD AREA (100 YR. FLOOD), AS DEFINED BY THE COMAL COUNTY, TEXAS, FIRM PANEL NUMBER 48091C455F EFFECTIVE DATE SEPTEMBER, 2, 2009, AS PREPARED BY THE FEDERAL EMERGENCY MANAGEMENT AGENCY.
9. THIS PROJECT IS LOCATED WITHIN THE JURISDICTIONAL BOUNDARY OF THE EDWARDS AQUIFER AUTHORITY AND WITHIN THE EDWARDS AQUIFER AUTHORITY RECHARGE ZONE.
10. GAS UTILITIES ARE NOT INCLUDED IN THE CIVIL CONSTRUCTION PLANS. FINAL GAS UTILITY DESIGN SHALL BE APPROVED BY THE CITY FOR ANY WORK WITHIN PUBLIC RIGHT-OF-WAY.

VILLAGES AT GRUENE NB, LLC.
4372 N. LOOP 1604 W. #206
SHAVANO PARK, TEXAS 78249

REQUIRED PERMITS	NUMBER
1. CITY OF NEW BRAUNFELS	#
2. NEW BRAUNFELS UTILITIES	W-150613, WW-150614
3. TCEQ	RN110919453 ID NO. 13001056

JUNE 2020

THIS DOCUMENT IS RELEASED FOR THE PURPOSE OF INTERIM REVIEW UNDER THE AUTHORITY OF CHRISTOPHER P. VAN HEERDE P.E. # 93047 ON 6/3/20. IT IS NOT TO BE USED FOR CONSTRUCTION, BIDDING OR PERMIT PURPOSES.

06/03/2020

ALL RESPONSIBILITY FOR THE ADEQUACY OF THESE PLANS REMAINS WITH THE ENGINEER OF RECORD. IN ACCEPTING THESE PLANS, THE CITY OF NEW BRAUNFELS MUST RELY UPON THE ADEQUACY OF THE WORK OF THE ENGINEER OF RECORD.

Christopher P. Van Heerde, P.E.

Christopher P. Van Heerde
P.E. Registration No. 93047

PREPARED BY:

HMT
ENGINEERING & SURVEYING

290 S. CASTELL AVE., STE. 100
NEW BRAUNFELS, TX 78130
HMTNB.COM
P(830)625-8555*F(830)625-8556
TBPE FIRM F-10961
TBPLS FIRM 1053600

Sheet List Table

Sheet Number	Sheet Title
C0.1 PI	COVER SHEET
C0.2 PI	GENERAL NOTES (1 OF 2)
C0.3 PI	GENERAL NOTES (2 OF 2)
C0.4 PI	SUBDIVISION PLAT (1 OF 2)
C0.5 PI	SUBDIVISION PLAT (2 OF 2)
C1.1 PI	DEMOLITION PLAN
C3.1 PI	EROSION CONTROL PLAN
C3.2 PI	EROSION CONTROL DETAILS
C5.0 PI	SUBDIVISION ENTRANCE
C5.10 PI	FIRE ACCESS EXHIBIT
C5.11 PI	STREET DETAILS
C8.1 PI	OVERALL WASTEWATER PLAN
C8.2 PI	WASTEWATER LINE A PLAN AND PROFILE (1 OF 2)
C8.3 PI	WASTEWATER LINE A PLAN AND PROFILE (2 OF 2)
C8.4 PI	WASTEWATER LINE B PLAN AND PROFILE
C8.5 PI	OFFSITE WW PLAN AND PROFILE
C8.6 PI	WASTEWATER DETAILS (1 OF 2)
C8.7 PI	WASTEWATER DETAILS (2 OF 2)
C9.1 PI	OVERALL WATER PLAN
C9.2 PI	WATER DETAILS
C10.1 PI	TRAFFIC CONTROL PLAN
C10.2 PI	TRAFFIC CONTROL DETAILS

NOTE TO CONTRACTOR:

BY THE ACT OF SUBMITTING A BID FOR THIS PROPOSED CONTRACT, THE BIDDER WARRANTS THAT THE BIDDER, AND ALL SUBCONTRACTORS AND MATERIAL SUPPLIERS HE INTENDS TO USE HAVE CAREFULLY AND THOROUGHLY REVIEWED THE DRAWINGS, SPECIFICATIONS AND ALL OTHER CONTRACT DOCUMENTS AND HAVE FOUND THEM COMPLETE AND FREE FROM ANY AMBIGUITIES AND SUFFICIENT FOR THE PURPOSE INTENDED. THE BIDDER FURTHER WARRANTS THAT TO THE BEST OF HIS OR HIS SUBCONTRACTORS' AND MATERIAL SUPPLIERS' KNOWLEDGE, ALL MATERIALS AND PRODUCTS SPECIFIED OR INDICATED HEREIN ARE ACCEPTABLE FOR ALL APPLICABLE CODES AND AUTHORITIES.

THE LOCATION OF ALL EXISTING UTILITIES SHOWN ON THESE PLANS HAS BEEN BASED UPON RECORD INFORMATION ONLY AND MAY NOT MATCH LOCATIONS AND/OR DEPTHS AS CONSTRUCTED. THE CONTRACTOR SHALL CONTACT EACH OF THE INDIVIDUAL UTILITIES FOR ASSISTANCE IN DETERMINING EXISTING UTILITY LOCATIONS AND DEPTHS PRIOR TO BEGINNING ANY CONSTRUCTION. CONTRACTOR SHALL FIELD VERIFY LOCATIONS OF ALL UTILITY CROSSINGS PRIOR TO BEGINNING ANY CONSTRUCTION.

Drawing Name: N:_Projects\170 - James Joplin\170.004 - Villages at Gruene Garden Homes\City\City Permit\170.004_COVR.dwg User: robertb Jun 03, 2020 - 5:00pm

CITY OF NEW BRAUNFELS GENERAL NOTES

ALL MATERIALS AND CONSTRUCTION PROCEDURES WITHIN THE SCOPE OF THIS CONTRACT SHALL COMPLY WITH:

A. CURRENT CITY OF NEW BRAUNFELS CONSTRUCTION SPECIFICATIONS AND STANDARDS AS OF THE DATE OF THIS CONTRACT

B. THE MOST CURRENT EDITION OF TEXAS DEPARTMENT OF TRANSPORTATION "STANDARD SPECIFICATIONS FOR CONSTRUCTION OF HIGHWAYS, STREETS, AND BRIDGES".

ALL CONSTRUCTION SHALL BE IN ACCORDANCE WITH THE MOST CURRENT TEXAS DEPARTMENT OF TRANSPORTATION "STANDARD SPECIFICATIONS FOR CONSTRUCTION OF HIGHWAYS, STREETS, AND BRIDGES." ALONG WITH CURRENT CITY OF NEW BRAUNFELS AND COMAL COUNTY SPECIFICATIONS. ANY DISCREPANCIES BETWEEN SPECIFICATIONS SHALL BE RESOLVED BY THE ENGINEER PRIOR TO PROCEEDING WITH CONSTRUCTION.

CONTRACTOR SHALL PROCURE ALL PERMITS AND LICENSES, PAY ALL CHARGES, FEES, AND TAXES AREA AND GIVE ALL NOTICES NECESSARY AND INCIDENTAL TO THE DUE AND LAWFUL PROSECUTION OF THE WORK.

ANY EXISTING OFF-SITE IMPROVEMENTS THAT ARE DAMAGED OR UNDERCUT BY THE CONTRACTOR'S OPERATIONS SHALL BE REPAIRED OR REPLACED AS DIRECTED BY THE ENGINEER AND APPROVED BY THE OWNER OF THE EXISTING IMPROVEMENT AT THE CONTRACTOR'S EXPENSE. (NO SEPARATE PAY ITEM)

WORK COMPLETED BY THE CONTRACTOR WHICH HAS NOT RECEIVED A WORK ORDER OR CONSENT OF THE OWNER OR ENGINEER WILL BE SUBJECT TO REMOVAL AND REPLACEMENT BY AND AT THE EXPENSE OF THE CONTRACTOR.

CONTRACTOR IS RESPONSIBLE FOR REMOVAL OF ALL WASTE MATERIALS UPON PROJECT COMPLETION. THE CONTRACTOR SHALL NOT PLACE ANY WASTE MATERIAL IN THE 100YR FLOOD PLAIN WITHOUT FIRST OBTAINING AN APPROVED FLOOD PLAIN DEVELOPMENT PERMIT.

BARRICADES AND WARNING SIGNS SHALL CONFORM TO THE "TEXAS MANUAL ON UNIFORM TRAFFIC CONTROL DEVICES" AND SHALL BE LOCATED TO PROVIDE MAXIMUM PROTECTION TO THE PUBLIC AS WELL AS CONSTRUCTION PERSONNEL AND EQUIPMENT WHILE PROVIDING CONTINUOUS TRAFFIC FLOW AT ALL TIMES DURING CONSTRUCTION. THE CONTRACTOR IS RESPONSIBLE FOR MAINTAINING ALL DEVICES DURING CONSTRUCTION.

CONTRACTOR IS REQUIRED TO VERIFY PROJECT ELEVATIONS. THE TERM "MATCH EXISTING" SHALL BE UNDERSTOOD TO SIGNIFY BOTH HORIZONTAL AND VERTICAL ALIGNMENT.

WHEN MATCHING EXISTING PAVEMENTS, CURBS, DRIVES, AND WALKS, THEY SHALL BE SAW CUT FULL DEPTH AND REMOVED TO ALLOW FOR PROPOSED CONSTRUCTION. IF ANY EXISTING JOINT IS ENCOUNTERED, PRECAUTION SHALL BE TAKEN DURING REMOVAL OF CONCRETE SO AS NOT TO DAMAGE EXISTING DOWELS. ALL EXISTING DOWELS SHALL BE EXPOSED AND CLEANED.

ITEM OF WORK DESIGNATED "BY OTHERS" SHALL NOT BE CONSIDERED PART OF THIS CONTRACT.

ALL "COMPACTED SUBGRADE" SHALL CONSIST OF NATIVE MATERIAL SCARIFIED TO A MINIMUM DEPTH OF SIX INCHES AND COMPACTED TO 95% DENSITY ACCORDING TO DENSITY TEST METHOD TEX-115E OR ACCORDING TO ASTM D-698 AND TESTED BY ASTM D-2922.

ALL "FLEXIBLE BASE" SHALL BE TYPE "A", GRADE 4, ACCORDING TO TXDOT ITEM 247, COMPACTED TO 95% MODIFIED DENSITY AT A MOISTURE CONTENT BETWEEN -2 AND +3 OF OPTIMUM PERCENT MOISTURE ACCORDING TO ASTM D-1557 (MODIFIED PROCTOR) AND TESTED BY ASTM D-2922.

ASPHALT PAVEMENT SHALL BE THE TYPE SPECIFIED ON THE PLANS AND ACCORDING TO TXDOT ITEM 340 "HOT MIX ASPHALT CONCRETE PAVEMENT".

PRIME COAT USING MC-30 AT A RATE OF 0.2 GALLONS PER SQUARE YARD SHALL BE PLACED OVER PREPARED BASE AT LEAST ONE DAY PRIOR TO LAYING ASPHALTIC CONCRETE PAVEMENT. ANY NECESSARY TACK COAT SHALL BE MC-30 AT 0.05 GALLONS PER SQUARE YARD. IT IS REQUIRED THAT BOTH THE PRIME COAT AND THE TACK COAT BE APPLIED AT THE TEMPERATURE SPECIFIED UNDER TXDOT ITEM 300.3.

CONCRETE SHALL BE CLASS "A" ACCORDING TO TXDOT ITEM 421 UNLESS OTHERWISE ON PLANS.

REINFORCING STEEL SHALL BE FROM NEW BILLET AND SHALL CONFORM TO TXDOT ITEM 440. ALL DIMENSIONS RELATING TO REINFORCING STEEL ARE TO CENTER OF BARS EXCEPT WHEN REFERRING TO CLEARANCE.

ALL SAWED JOINTS SHALL BE SAWED WITHIN 24 HOURS OF POURING,

ABSOLUTELY NO WELDING OF REINFORCING BARS OR TORCHING TO BEND REINFORCING BARS SHALL BE ALLOWED WITHOUT THE SPECIFIC APPROVAL OF THE ENGINEER.

ORDINARY COMPACTION CONTROL IS REQUIRED ON THIS PROJECT.

ALL ROLLING FOR COMPACTION OF ASPHALTIC CONCRETE PAVEMENT SHALL BE COMPLETED BEFORE THE MIXTURE TEMPERATURE DROPS BELOW 175 DEG. (F).

ALL FILL MATERIAL SHALL BE SUBJECT TO THE ENGINEER'S APPROVAL.

CONTRACTOR AGREES TO ASSUME SOLE AND COMPLETE RESPONSIBILITY FOR JOB SITE CONDITIONS DURING THE CONSTRUCTION OF THE PROJECT, INCLUDING SAFETY OF ALL PERSONS AND PROPERTY; THAT THIS REQUIREMENT SHALL APPLY CONTINUOUSLY AND SHALL NOT BE LIMITED TO THE NORMAL WORKING HOURS; AND THAT THE CONTRACTOR SHALL DEFEND, INDEMNIFY AND HOLD THE OWNERS AND THE ENGINEER AND HIS EMPLOYEES, PARTNERS, OFFICES, DIRECTORS, OR CONSULTANTS, HARMLESS FROM ANY AND ALL LIABILITY, REAL OR ALLEGED, IN CONNECTION WITH THE PERFORMANCE OF THE WORK ON THIS PROJECT, EXCEPTING FROM LIABILITY ARISING FROM SOLE NEGLIGENCE OF THE OWNER OR ENGINEER, ENGINEER'S DIRECTORS, OFFICERS, EMPLOYEES, OR CONSULTANTS.

ALL CMP (CORRUGATED METAL PIPE) USED ON THIS PROJECT SHALL HAVE A MANNING'S "N" VALUE OF 0.024., UNLESS OTHERWISE SHOWN ON PLANS.

CONTRACTOR WILL BE RESPONSIBLE FOR ALL CONSTRUCTION TESTING PER CURRENT CITY OF NEW BRAUNFELS REQUIREMENTS. ALL TEST RESULTS SHALL BE SUBMITTED TO THE ENGINEER FOR REVIEW AND APPROVAL. ENGINEER AND OWNER RESERVE THE RIGHT TO HAVE THE CONTRACTOR REMOVE AND REPLACE ANY MATERIAL THAT WAS NOT TESTED OR FAILED TESTING. ALL COST ASSOCIATED WITH THE REMOVAL, REPLACEMENT AND TESTING SHALL BE PAID BY THE CONTRACTOR.

ALL PVC SLEEVES SHALL BE INSTALLED 3 FEET BELOW FINISHED GRADE AND ENDS SHALL BE MARKED SO THAT LOCATIONS OF SLEEVES CAN BE EASILY IDENTIFIED.

PRE-CONSTRUCTION CONFERENCE IS REQUIRED, ENGINEER WILL ARRANGE SUCH CONFERENCE IN COORDINATION WITH CITY OF NEW BRAUNFELS STREET INSPECTOR & NEW BRAUNFELS UTILITIES INSPECTOR. NO CONSTRUCTION MAY BEGIN PRIOR TO THE PRE-CONSTRUCTION CONFERENCE.

CONTRACTOR SHALL COORDINATE WITH DRY UTILITY INSTALLERS AND SHARED TRENCHING SHALL BE UTILIZED. CUTTING THE STREETS AFTER COMPLETION BY DRY UTILITIES SHALL NOT BE ACCEPTABLE.

AS PER PLATTING ORDINANCE SECTION 118-38M.: WHEN ALL IMPROVEMENTS ARE FOUND TO BE CONSTRUCTED AND COMPLETED IN ACCORDANCE WITH THE APPROVED PLANS AND SPECIFICATIONS AND WITH THE CITY'S STANDARDS, AND UPON RECEIPT OF ONE SET OF "RECORD DRAWINGS" PLANS, AND A DIGITAL COPY OF ALL PLANS (AUTOCAD 2000 MINIMUM) THE CITY ENGINEER SHALL ACCEPT SUCH IMPROVEMENTS FOR THE CITY OF NEW BRAUNFELS, SUBJECT TO THE GUARANTY OF MATERIAL AND WORKMANSHIP PROVISIONS IN THIS SECTION.

EROSION / SEDIMENTATION CONTROL

AT A MINIMUM, THESE CONTROLS SHALL CONSIST OF ROCK BERMS AND/OR SILT FENCES CONSTRUCTED PARALLEL TO AND DOWN GRADIENT FROM THE TRENCHES. THE ROCK BERM OR SILT FENCES SHALL BE INSTALLED IN A MANNER SUCH THAT ANY RAINFALL RUNOFF SHALL BE FILTERED. HAY BALES SHALL NOT BE USED FOR TEMPORARY EROSION AND SEDIMENTATION CONTROLS.

ALL TEMPORARY EROSION AND SEDIMENTATION CONTROLS MUST BE INSTALLED PRIOR TO CONSTRUCTION AND SHALL BE MAINTAINED DURING CONSTRUCTION BY THE CONTRACTOR. THE CONTRACTOR SHALL REMOVE THE CONTROLS WHEN VEGETATION IS ESTABLISHED AND THE CONSTRUCTION AREA IS STABILIZED {31 TAC 313.5 (C)(12)}. ADDITIONAL PROTECTION MAY BE REQUIRED IF EXCESSIVE SOLIDS ARE BEING DISCHARGED FROM THE SITE.

ALL TEMPORARY EROSION AND SEDIMENTATION CONTROLS SHALL BE REMOVED BY THE CONTRACTOR AT FINAL ACCEPTANCE OF THE PROJECT BY THE OWNER/ENGINEER.

PLACEMENT OF TEMPORARY EROSION AND SEDIMENTATION CONTROLS SHALL BE IN ACCORDANCE WITH THE CONSTRUCTION PLANS. ACTUAL LOCATIONS MAY VARY SLIGHTLY FROM THE PLANS, BUT WILL BE VERIFIED BY THE ENGINEER/INSPECTOR IN THE FIELD PRIOR TO CONSTRUCTION. THE CONTRACTOR SHALL INSPECT THE CONTROLS AT WEEKLY INTERVALS AND AFTER EVERY SIGNIFICANT RAINFALL TO INSURE DISTURBANCE OF THE STRUCTURES HAS NOT OCCURRED. SEDIMENT DEPOSITED AFTER A RAINFALL SHALL BE REMOVED FROM THE SITE OR PLACED IN AN ENGINEER APPROVED DESIGNATED DISPOSAL AREA.

CONTRACTOR SHALL BE RESPONSIBLE TO INSURE THAT NO EROSION CONTROL MEASURES BLOCK THE DRAINAGE SYSTEM FROM WORKING AS DESIGNED.

UTILITIES

LOCATION AND DEPTH OF EXISTING UTILITIES SHOWN HERE ARE APPROXIMATE ONLY. ACTUAL LOCATIONS AND DEPTHS MUST BE VERIFIED BY THE CONTRACTOR PRIOR TO CONSTRUCTION. THE CONTRACTOR SHALL BE RESPONSIBLE FOR PROTECTION OF ALL EXISTING UTILITIES ENCOUNTERED DURING CONSTRUCTION, INCLUDING THOSE NOT SHOWN ON THE DRAWINGS.
ANY EXISTING UTILITIES, ON OR OFF THE SITE, THAT ARE DAMAGED OR UNDERCUT BY THE CONTRACTOR'S OPERATIONS SHALL BE REPAIRED OR REPLACED AS DIRECTED BY THE ENGINEER AND APPROVED BY THE RESPECTIVE UTILITY COMPANY AT THE CONTRACTOR'S EXPENSE.
CONTRACTOR SHALL NOTIFY APPROPRIATE UTILITY COMPANIES AND GOVERNMENTAL AGENCIES AT LEAST 48 HOURS PRIOR TO CONSTRUCTION AT:

THE CONTRACTOR SHALL NOTIFY THE FOLLOWING UTILITY COMPANIES 48 HOURS PRIOR TO EXCAVATION

NEW BRAUNFELS UTILITIES (WATER AND SEWER)	(830) 608-8971
NEW BRAUNFELS UTILITIES (ELECTRIC)	(830) 608-8951
CHARTER SPECTRUM	(800) 706-7376
CENTERPOINT ENERGY (GAS)	(830) 643-6434
AT&T	(830) 303-1333
TEXAS ONE CALL SYSTEM	(800) 245-4545
ENERGY TRANSFER (PETROLEUM PIPELINE)	(210) 262-2486

CONTRACTOR SHALL REFERENCE NEW BRAUNFELS UTILITIES PLANS FOR FINAL ELECTRICAL LINE DESIGNS AND LAYOUT.

WASTEWATER NOTES

REVISED 3/31/11

1. THE CONTRACTOR SHALL MAINTAIN SERVICE TO EXISTING WASTEWATER SYSTEM AT ALL TIMES DURING CONSTRUCTION.
2. A MINIMUM OF 8" WASTEWATER PIPE AND FITTING (P.V.C. SDR-26, ASTM, D-3034, D-3212, F-477) ARE REQUIRED ON NEW INSTALLATION.
3. ALL RESIDENTIAL WASTEWATER SERVICE LATERALS SHALL BE EXTENDED TO THE PROPERTY LINE AND A CLEANOUT SHALL BE INSTALLED AT THE PROPERTY LINE. SERVICES TO LOTS WILL EXTEND FOUR (4) FEET PAST THE UNDERGROUND ELECTRIC CONDUIT IF ELECTRIC IS INSTALLED IN THE FRONT EASEMENT.
4. PIPE BEDDING OF WASTEWATER LINES SHALL BE MANUFACTURED SAND OR PEA GRAVEL AS PER NBU SPECIFICATIONS.
5. SECONDARY BACKFILL OF WASTEWATER LINES SHALL GENERALLY CONSIST OF MATERIALS REMOVED FROM THE TRENCH AND SHALL BE FREE FROM BRUSH, DEBRIS AND TRASH, NO ROCKS OR STONES HAVING ANY DIMENSION LARGER THAN 6 INCHES AT THE LARGEST DIMENSION.
6. ALL WASTEWATER PIPES SHALL HAVE COMPRESSION OR MECHANICAL JOINTS AS PER 30 TAC §217.53 (C) (2).
7. FOR WASTEWATER LINES LESS THAN 24" IN DIAMETER, SELECT INITIAL BACKFILL MATERIAL SHALL BE PLACED IN TWO LIFTS.
   a. THE FIRST LIFT SHALL BE SPREAD UNIFORMLY AND SIMULTANEOUSLY ON EACH SIDE AND UNDER THE SHOULDERS OF THE PIPE TO THE MID POINT OR SPRING LINE OF THE PIPE.
   b. THE SECOND LIFT SHALL BE PLACED TO A DEPTH AS SHOWN ON THE PIPE BACKFILL DETAIL. FOR PIPES LARGER THAN 24", 12" MAXIMUM LIFTS SHALL BE USED.
8. ALL MANHOLES MUST BE WATER TIGHT, EITHER MONOLITHIC, CAST-IN-PLACE CONRETE STRUCTURES OR PREFABRICATED MANHOLES SPECIFICALLY APPROVED BY NBU. THE MANHOLES SHALL HAVE WATER-TIGHT RINGS AND COVERS. WHEREEVER THEY ARE WITHIN THE 100 YEAR FLOODPLAIN, THE MANHOLE COVERS SHALL BE BOLTED. EVERY THIRD MANHOLE IN SEQUENCE SHALL HAVE AN ALTERNATE MEANS OF VENTING. 30 TAC §213.5 (C)(3)(A) AND 30 TAC §217.55 (O).
9. ALL MANHOLES SHALL BE CONSTRUCTED SO THAT THE TOP OF THE RING IS TWO INCHES (2") ABOVE SURROUNDING GROUND EXCEPT WHEN LOCATED IN PAVED AREA. IN PAVED ARES, THE MANHOLE RING SHALL BE FLUSH WITH PAVEMENT.
10. ALL NEW MANHOLES, UNLESS APPROVED BY NBU ENGINEERING, ARE TO HAVE COVERS WITH 32" OPENINGS.
11. WASTEWATER PIPE CONNECTIONS TO PRE-CAST MANHOLES WILL BE COMPRESSION JOINTS OR MECHANICAL "BOOT TYPE" JOINT AS APPROVED BY NBU.
12. WASTEWATER LINES SHALL BE TESTED FROM MANHOLE TO MANHOLE.
13. IN AREAS WHERE A NEW WASTEWATER MANHOLE IS TO BE CONSTRUCTED OVER AN EXISTING WASTEWATER SYSTEM, IT SHALL BE THE CONTACTOR'S RESPONSIBILITY TO TEST THE EXISTING MANHOLES BEFORE CONSTRUCTION. AFTER THE PROPOSED MANHOLE(S) HAS BEEN BUILT, THE CONTRACTOR SHALL RE-TEST THE EXISTING SYSTEM TO THE SATISFACTION OF THE CONSTRUCTION INSPECTOR. (NO SEPARATE PAY ITEM).
14. WHERE THE MINIMUM 9 FOOT SEPARATION DISTANCE BETWEEN WASTEWATER LINES AND WATER LINES / MAINS CANNOT BE MAINTAINED, THE INSTALLATION OF WASTEWATER LINES SHALL BE IN STRICT ACCORDANCE WITH TCEQ. THE WASTEWATER LINE SHALL BE CONSTRUCTED OF CAST IRON, DUCTILE IRON OR PVC MEETING THE ASTM SPECIFICATION FOR BOTH PIPES AND JOINTS OF 150 PSI AND SHALL BE IN ACCORDANCE WITH 30 TAC §217.53 (D) (3) (A) (I).
15. NO TESTING WILL BE PERFORMED PRIOR TO 30 DAYS FROM COMPLETE INSTALLATION OF THE WASTEWATER LINES. THE FOLLOWING SEQUENCE WILL BE STRICTLY ADHERED TO:
   a. PULL MANDREL
   b. PERFORM AIR TEST
   c. CLEANING OF ANY DEBRIS
   d. FLUSHING OF SYSTEM
   e. TV INSPECTION (WITHIN 72 HOURS OF FLUSHING)
16. A MINIMUM OF 3 FEET OF COVER IS TO BE MAINTAINED OVER THE WASTEWATER MAIN AND LATERALS AT SUBGRADE, OTHERWISE CONCRETE ENCASEMENT WILL BE REQUIRED.
17. WASTEWATER MAIN CONNECTIONS MADE DIRECTLY TO EXISTING MANHOLES WILL REQUIRE SUCCESSFUL TESTING OF THE MANHOLE IN ACCORDANCE WITH NBU CONNECTION & CONSTRUCTION POLICY MANUAL.
18. TCEQ AND EPA REQUIRE EROSION AND SEDIMENTATION CONTROL FOR CONSTRUCTION OF WASTEWATER COLLECTION SYSTEMS. DEVELOPER OR AUTHORIZED REPRESENTATIVE SHALL PROVIDE EROSION AND SEDIMENTATION CONTROL AS NOTES ON THE PROJECT'S PLAN AND PROFILE SHEETS. ALL TEMPORARY EROSION AND SEDIMENTATION CONTROLS SHALL BE REMOVED BY THE CONTRACTOR AT FINAL ACCEPTANCE OF THE PROJECT BY NBU WATER SYSTEMS.
19. ALL MANHOLES NOT WITHIN PAVED STREETS SHALL HAVE LOCKING CONCRETE COLLAR TO SECURE RING AND COVER TO MANHOLE CONE PER NBU DETAIL DRAWING #329.
20. ALL MANHOLES OVER THE EDWARDS AQUIFER RECHARGE ZONE SHALL HAVE LOCKING CONCRETE COLLAR TO SECURE RING AND COVER TO MANHOLE CONE PER NBU DETAIL DRAWING #329.

WATER NOTES

REVISED 5/16/19

1. ALL WATER MAINS SHALL BE AWWA C900 (CLASS 150 OR GREATER).
2. WATER SERVICES SHALL BE SINGLE 1"COPPER TUBING.
3. WATER LINE IS TO BE CONSTRUCTED IN ACCORDANCE WITH THE NBU SYSTEMS CONNECTION & CONSTRUCTION POLICY.
4. WATER MAIN SHALL HAVE A MINIMUM OF 42 INCHES OF COVER, OTHERWISE CONCRETE ENCASEMENT WILL BE REQUIRED.
5. EACH UNIT IN A DUPLEX, TRIPLEX, FOURPLEX, OR CONDOMINIUM SHALL BE PROVIDED WITH AN INDIVIDUAL WATER METER. A MASTER METER CAN BE CONSIDERED FOR SEPARATE BUILDINGS, HOWEVER, THOSE BUILDINGS MUST BE PLUMBED TO ALLOW SEPARATE METERS FOR FUTURE CONSIDERATION.
6. CONTRACTOR WILL KEEP THE AREA ON TOP OF AND AROUND THE WATER METER BOX FREE OF ALL OBJECTS AND DEBRIS.
7. INITIAL BACKFILL OF WATER LINES SHALL BE MANUFACTURED SAND OR PEA GRAVEL AS PER NBU SYSTEMS CONNECTION & CONSTRUCTION POLICY.
8. SECONDARY BACKFILL OF WATER LINES SHALL GENERALLY CONSIST OF MATERIAL REMOVED FROM THE TRENCH AND SHALL BE FREE FROM BRUSH, DEBRIS AND TRASH OR STONES HAVING ANY DIMENSION LARGER THAN 6"INCHES AT THE LARGEST DIMENSION.
9. HYDROSTATIC TESTING IS DONE FROM VALVE TO VALVE.
10. NO METER BOXES TO BE SET IN DRIVEWAYS OR SIDEWALKS. ANY METER BOXES SET IN DRIVEWAYS OR SIDEWALKS WILL BE RELOCATED AT CONTRACTOR'S AND/OR DEVELOPER'S EXPENSE.
11. METER BOXES MUST BE SET AT THE PROPOSED GRADE. ANY METER BOXES THAT ARE NOT SET AT THE FINAL GRADE WILL BE ADJUSTED AT CONTRACTOR'S AND/OR DEVELOPER'S EXPENSE.
12. ACCEPTABLE METER BOXES ARE D13-BAMR AND D15-BAMR. NEW RESIDENTIAL LOTS ARE REQUIRED TO USE THE D15-BAMR METER BOXES (DOUBLE AMR). COMMERCIAL LOTS SHOULD CHOOSE WHICH BOX APPLIES TO THE DOMESTIC AND/OR IRRIGATION METER LAYOUT.
13. THRUST BLOCKS WILL NOT BE ALLOWED ON THE SYSTEM WITHOUT SPECIAL APPROVAL. JOINTS WILL BE RESTRAINED WITH RESTRAINING SYSTEMS APPROVED BY NBU AND RESTRAINT LENGTH SHALL BE SUBMITTED TO NBU AT THE TIME OF PLAN SUBMITTAL.
14. CONTRACTOR SHALL PLACE TRACER WIRE ON TOP OF THE WATER MAINS. TRACER WIRE SHOULD RUN FROM VALVE TO VALVE AND EXIT AT THE VALVE BOX. THE TRACER WIRE SHOULD BE ATTACHED TO THE TOP OF THE PIPE USING TAPE. EXCESS WIRE SHOULD BE LEFT WITHIN VALVE BOXES TO BE PLACED WITHIN LID OF COVER.
15. WATER QUALITY SHALL BE PROTECTED WITH APPROPRIATE BACKFLOW PREVENTION ASSEMBLIES INSTALLED ON ALL IRRIGATION SYSTEMS, FIRE SUPPRESSION SYSTEMS AND MULTI-UNIT COMPLEXES ALONG WITH MULTI-LEVEL PROPERTIES ON THE DOMESTIC METER CONTAINMENT. NBU CAN ASSIST WITH THE DECISION ON APPROPRIATE BACKFLOW ASSEMBLIES ON A CASE BY CASE BASIS. CONTACT NBU BACKFLOW PREVENTION SPECIALIST FOR MORE DETAILS. EMAIL QUESTIONS TO CROSSCONNECTION@NBUTEXAS.COM
16. ALL BACKFLOW PREVENTION ASSEMBLIES SHALL BE TESTED UPON INSTALLATION AND REPORT SENT TO NBU VIA THE ONLINE TRACKING SYSTEM, CONTACT NBU BACKFLOW PREVENTION SPECIALIST FOR MORE DETAILS. EMAIL QUESTIONS TO CROSSCONNECTION@NBUTEXAS.COM
17. ALL RESIDENTIAL AND COMMERCIAL PROPERTIES SHALL HAVE A CUSTOMER SERVICE INSPECTION CERTIFICATE (CSI INSPECTION) COMPLETED UPON COMPLETION OF THE BUILDING OR HOME STRUCTURE. CONTACT NBU BACKFLOW PREVENTION SPECIALIST FOR MORE DETAILS. EMAIL QUESTIONS TO CROSSCONNECTION@NBUTEXAS.COM

SEQUENCE OF CONSTRUCTION

1. INSTALL EROSION CONTROLS PER APPROVED PLAN.
2. TEMPORARY CONTROLS TO BE INSPECTED AND MAINTAINED WEEKLY AND PRIOR TO ANTICIPATED RAINFALL EVENTS, AND AFTER RAINFALL EVENTS, AS NEEDED. CONTRACTOR/OWNER SHALL PROVIDE A CONTACT NAME AND NUMBER FOR EROSION CONTROL ISSUES.
3. CONDUCT DEMOLITION ACTIVITIES, IF APPLICABLE.
4. CONSTRUCT DRAINAGE IMPROVEMENTS, IF APPLICABLE.
5. CONSTRUCT CURB INLET PROTECTION AT THE TIME OF CURB INLET INSTALLATION.
6. CONSTRUCT DEVELOPMENT PER APPROVED PLANS.
7. INSTALL STREETSCAPE AND/OR LANDSCAPING IMPROVEMENTS.
8. CONTRACTOR TO VEGETATE ANY DISTURBED AREAS ONCE FINAL GRADING IS COMPLETE, AND ESTABLISH A MIN OF 80% VEGETATION PRIOR TO COMPLETION
9. REMOVE ALL TEMPORARY EROSION CONTROL MEASURES.
10. TPDES REQUIREMENTS - DISTURBED AREAS ON WITCH CONSTRUCTION ACTIVITIES HAVE CEASED (TEMPORARY OR PERMANENTLY) SHALL BE STABILIZED WITHIN 14 DAYS UNLESS ACTIVITY WILL BEGIN AGAIN WITHIN 21 DAYS

GENERAL NBU NOTES

REVISED 3/31/11

1. ALL MATERIALS AND CONSTRUCTION PROCEDURES WITHIN THE SCOPE OF THE PROJECT SHALL BE APPROVED BY NEW BRAUNFELS UTILITIES AND COMPLY WITH THE CURRENT "NEW BRAUNFELS UTILITIES WATER SYSTEMS CONNECTION/CONSTRUCTION POLICY".
2. CONTRACTOR SHALL NOT PROCEED WITH ANY PIPE INSTALLATION WORK UNTIL THEY OBTAIN A COPY OF THE PLANS FROM THE CONSULTANT OR ENGINEER AND NOTIFY NBU WATER SYSTEMS ENGINEERING AT 830-608-8971 WITH AT LEAST TWO (2) WORKING DAYS (48 NOTICE. WORK COMPLETED BY THE CONTRACTOR, WHICH HAS NOT RECEIVED A NOTICE TO PROCEED FROM NEW BRAUNFELS UTILITIES WATER SYSTEMS ENGINEERING WILL BE SUBJECT TO REMOVAL AND REPLACEMENT BY AND AT THE EXPENSE OF THE CONTRACTOR.
3. THE DEVELOPER DEDICATES THE WATER / WASTEWATER MAINS UPON COMPLETION BY THE CONTRACTOR AND ACCEPTANCE BY THE NEW BRAUNFELS UTILITIES WATER SYSTEM. NBU WILL OWN AND MAINTAIN SAID WATER / WASTEWATER MAINS WHICH ARE LOCATED WITHIN PLATTED UTILITY EASEMENTS OR PUBLIC ROW OF PROPOSED DEVELOPMENTS. (AS APPLICABLE).
4. CONTRACTOR AGREES TO ASSUME SOLE AND COMPLETE RESPONSIBILITY FOR JOB SITE CONDITIONS DURING THE CONSTRUCTION OF THE PROJECT, INCLUDING SAFETY OF ALL PERSONS AND PROPERTY. THIS REQUIREMENT SHALL APPLY CONTINUOUSLY AND NOT BE LIMITED TO NORMAL WORKING HOURS. THE CONTRACTOR SHALL DEFEND, INDEMNIFY AND HOLD THE OWNERS AND THE ENGINEER AND HIS EMPLOYEES, PARTNERS OFFICERS, DIRECTORS, OR CONSULTANTS HARMLESS FROM ANY AND ALL LIABILITY, REAL OR ALLEGED, IN CONNECTION WITH THE PERFORMANCE OF THE WORK ON THIS PROJECT, EXCEPTING FROM LIABILITY ARISING FROM SOLE NEGLIGENCE OF THE OWNER OR ENGINEER, ENGINEER'S DIRECTORS, OFFICERS, EMPLOYEES, OR CONSULTANTS.
5. CONTRACTOR TO CONTACT THE ENGINEER-OF-RECORD (EOR) FOR ANY FIELD CHANGES. ANY REVISIONS OR CHANGES TO THE APPROVED CONSTRUCTION PLANS WILL REQUIRE ADDITIONAL APPROVAL BY NBU IN WRITING.
6. CONTRACTOR AND / OR CONTRACTOR'S INDEPENDENTLY RETAINED EMPLOYEE OR SAFETY CONSULTANT SHALL IMPLEMENT A TRENCH SAFETY PROGRAM IN ACCORDANCE WITH OSHA STANDARDS GOVERNING THE PRESENCE AND ACTIVITIES OF INDIVIDUALS WORKING IN AND AROUND TRENCH EXCAVATION.
7. CONTRACTOR SHALL BE RESPONSIBLE FOR RESTORING TO ITS ORIGINAL OR BETTER CONDITION, ANY DAMAGES DONE TO EXISTING FENCES, CURBS, STREETS, DRIVEWAYS, LANDSCAPING AND STRUCTURES, AND EXISTING UTILITIES (NOT ADJUSTED ON PLANS). COST OF RESTORATIONS, IF ANY, SHALL BE THE CONTRACTOR'S ENTIRE EXPENSE.
8. THE CONTRACTOR SHALL AVOID CUTTING ROOTS LARGER THAN ONE INCH IN DIAMETER WHEN EXCAVATING NEAR EXISTING TREES. EXCAVATION IN VICINITY OF TREES SHALL PROCEED WITH CAUTION.
9. CONTRACTOR SHALL PROCURE ALL PERMITS AND LICENSES, PAY ALL CHARGES, FEES AND TAXES AND GIVE ALL NOTICES NECESSARY AND INCIDENTAL TO THE DUE AND LAWFUL PROSECUTION OF THE WORK.
10. NO EXTRA PAYMENT SHALL BE ALLOWED FOR WORK CALLED FOR ON THE PLANS BUT NOT INCLUDED ON THE BID SCHEDULE. THIS INCIDENTAL WORK WILL BE REQUIRED AND SHALL BE INCLUDED UNDER THE PAY ITEM TO WHICH IT RELATES.
11. CONTRACTOR IS RESPONSIBLE FOR REMOVAL OF ALL WASTE MATERIALS UPON PROJECT COMPLETION. THE CONTRACTOR SHALL NOT PERMANENTLY PLACE ANY WASTE MATERIALS IN THE 100-YEAR FLOOD PLAIN WITHOUT FIRST OBTAINING AN APPROVED FLOOD PLAIN DEVELOPMENT PERMIT.
12. THE CONTRACTOR SHALL NOT PLACE ANY MATERIALS ON THE RECHARGE ZONE OF THE EDWARDS AQUIFER WITHOUT AN APPROVED WATER POLLUTION ABATEMENT PLAN FROM THE TCEQ 31 TAC 313.4 AND 31 TAC 313.9.
13. BARRICADES AND WARNING SIGNS SHALL CONFORM TO THE "TEXAS MANUAL ON UNIFORM TRAFFIC CONTROL DEVICES" AND SHALL BE LOCATED TO PROVIDE MAXIMUM PROTECTION TO THE PUBLIC AS WELL AS CONSTRUCTION PERSONNEL AND EQUIPMENT WHILE PROVIDING CONTINUOUS TRAFFIC FLOW AT ALL TIMES DURING CONSTRUCTION. THE CONTRACTOR IS RESPONSIBLE FOR MAINTAINING ALL DEVICES DURING CONSTRUCTION.
14. CONTRACTOR IS REQUIRED TO VERIFY PROJECT ELEVATIONS. THE TERM "MATCH EXISTING" SHALL BE UNDERSTOOD TO SIGNIFY BOTH HORIZONTAL AND VERTICAL ALIGNMENT.
15. THE LOCATION OF UTILITIES, EITHER UNDERGROUND OR OVERHEAD, SHOWN WITHIN THE RIGHT OF WAY ARE APPROXIMATE AND SHALL BE VERIFIED BY THE CONTRACTOR BEFORE BEGINNING CONSTRUCTION OPERATIONS.
16. OSHA REGULATIONS PROHIBIT OPERATIONS THAT WILL BRING PERSONS OR EQUIPMENT WITHIN 10 FEET OF AN ENERGIZED LINE. WHERE WORKMEN AND/OR EQUIPMENT HAVE TO WORK CLOSE TO AN ENERGIZED ELECTRICAL LINE, THE CONTRACTOR SHALL NOTIFY THE ELECTRICAL POWER COMPANY INVOLVED AND MAKE WHATEVER ADJUSTMENTS NECESSARY TO ENSURE THE SAFETY OF THOSE WORKMEN.
17. IT SHALL BE THE CONTRACTOR'S RESPONSIBILITY TO LOCATE UTILITY SERVICE LINES AS REQUIRED FOR CONSTRUCTION. CONTRACTORS SHALL CALL THE ONE CALL SYSTEM FOR WATER/WASTEWATER LOCATION.
18. DUE TO FEDERAL REGULATIONS TITLE 49, PART 192 (8), GAS COMPANIES MUST MAINTAIN ACCESS TO GAS VALVES AT ALL TIMES. THE CONTRACTOR MUST PROTECT AND WORK AROUND ANY GAS VALVES THAT ARE IN THE PROJECT AREA.
19. THE CONTRACTOR IS FULLY RESPONSIBLE FOR THE TRAFFIC CONTROL AND WILL BE RESPONSIBLE FOR FURNISHING ALL TRAFFIC CONTROL DEVICES, AND FLAGGERS. THE CONSTRUCTION METHODS SHALL BE CONDUCTED TO PROVIDE THE LEAST POSSIBLE INTERFERENCE TO TRAFFIC SO AS TO PERMIT THE CONTINUOUS MOVEMENT OF THE TRAFFIC IN ONE DIRECTION AT ALL TIMES. THE CONTRACTOR SHALL CLEAN UP AND REMOVE FROM THE WORK AREA ANY LOOSE MATERIAL RESULTING FROM CONTRACT OPERATIONS AT THE END OF EACH WORKDAY.
20. PRIOR TO ORDERING MATERIALS TO BE USED IN CONSTRUCTION, CONTRACTOR SHALL PROVIDE THE ENGINEER WITH FOUR (4) COPIES OF THE SOURCE, TYPE, GRADATION, MATERIAL SPECIFICATION DATA AND / OR SHOP DRAWINGS, AS APPLICABLE, TO SATISFY THE REQUIREMENTS OF THE FOLLOWING ITEMS AND ALL MATERIAL ITEMS REFERRED TO IN THESE LISTED ITEMS:
   A. WATER MAINS AND SERVICES
   B. WASTEWATER MAINS AND SERVICES
21. THRUST BLOCKS WILL NOT BE ALLOWED ON THE SYSTEM WITHOUT SPECIAL APPROVAL. JOINTS WILL BE RESTRAINED WITH RESTRAINING SYSTEMS APPROVED BY NBU AND RESTRAINT LENGTH SHALL BE SUBMITTED TO NBU AT THE TIME OF PLAN SUBMITTAL.
22. WATER JETTING THE BACKFILL WITHIN A STREET WILL NOT BE PERMITTED. WASTEWATER TRENCHES SUBJECT TO TRAFFIC SHALL CONFORM TO NBU CONNECTION AND CONSTRUCTION POLICY MANUAL.
23. WHERE THE MINIMUM 9 FOOT SEPARATION DISTANCE BETWEEN WASTEWATER LINES AND WATER LINES / MAINS CANNOT BE MAINTAINED, THE INSTALLATION OF WASTEWATER LINES SHALL BE IN STRICT ACCORDANCE WITH 30 TAC 217.
24. CONTRACTOR AND/OR CONTRACTOR'S INDEPENDENTLY RETAINED EMPLOYEE OR STRUCTURAL DESIGN/GEOTECHNICAL/SAFETY/EQUIPMENT CONSULTANT, IF ANY, SHALL REVIEW THESE PLANS AND AVAILABLE GEOTECHNICAL INFORMATION AND THE ANTICIPATED INSTALLATION SITE(S) WITHIN THE PROJECT WORK AREA IN ORDER TO IMPLEMENT CONTRACTOR'S TRENCH EXCAVATION SAFETY PROTECTION SYSTEMS, PROGRAMS AND/OR PROCEDURES. THE CONTRACTOR'S IMPLEMENTATION OF THE SYSTEMS, PROGRAMS AND/OR PROCEDURES SHALL PROVIDE FOR ADEQUATE TRENCH EXCAVATION SAFETY PROTECTION THAT COMPLIES WITH AS A MINIMUM, OSHA STANDARDS FOR TRENCH EXCAVATIONS. SPECIFICALLY, CONTRACTOR AND/OR CONTRACTOR'S INDEPENDENTLY RETAINED EMPLOYEE OR SAFETY CONSULTANT SHALL IMPLEMENT A TRENCH SAFETY PROGRAM IN ACCORDANCE WITH OSHA STANDARDS GOVERNING THE PRESENCE AND ACTIVITIES OF INDIVIDUALS WORKING IN AND AROUND TRENCH EXCAVATION.
25. UTILITY TRENCH COMPACTION WITH STREET R.O.W.

A. ALL UTILITY TRENCH COMPACTION TEST WITHIN THE STREET PAVEMENT SECTION SHALL BE THE RESPONSIBILITY OF THE DEVELOPER'S GEO-TECHNICAL ENGINEER.
B. FILL MATERIAL SHALL BE PLACED IN UNIFORM LAYERS NOT TO EXCEED TWELVE INCHES (12") LOOSE.
C. EACH LAYER OF MATERIAL SHALL BE COMPACTED AS SPECIFIED AND TESTED FOR DENSITY AND MOISTURE IN ACCORDANCE WITH TEXT METHODS TEX-113-E, TEX-114-E, TEX-115-E.
D. THE NUMBER AND LOCATION OF REQUIRED TESTS SHALL BE DETERMINED BY THE GEOTECHNICAL ENGINEER AND APPROVED BY THE CITY OF NEW BRAUNFELS STREET INSPECTOR.
E. UPON COMPLETION OF TESTING THE GEO-TECHNICAL ENGINEER SHALL PROVIDE THE CITY OF NEW BRAUNFELS STREET INSPECTOR WITH ALL TESTING DOCUMENTATION AND A CERTIFICATION STATING THAT THE PLACEMENT OF FILL MATERIAL HAS BEEN COMPLETED IN ACCORDANCE WITH THE PLANS.

CITY OF NEW BRAUNFELS CONSTRUCTION NOTES

REVISED 03/2020

IF CONSTRUCTION HAS NOT COMMENCED WITHIN ONE-YEAR OF CITY APPROVAL FOR CONSTRUCTION INSPECTION, THAT APPROVAL IS NO LONGER VALID.

THE MOST CURRENT EDITIONS OF THE CITY OF SAN ANTONIO STANDARD SPECIFICATIONS AND THE TEXAS DEPARTMENT OF TRANSPORTATION STANDARD SPECIFICATIONS FOR CONSTRUCTION OF HIGHWAYS, STREETS AND BRIDGES SHALL BE FOLLOWED FOR ALL CONSTRUCTION EXCEPT AS AMENDED BY THE CITY OF NEW BRAUNFELS STANDARD DETAILS.

ALL RESPONSIBILITY FOR THE ADEQUACY OF THESE PLANS REMAINS WITH THE ENGINEER OF RECORD. IN ACCEPTING THESE PLANS, THE CITY OF NEW BRAUNFELS MUST RELY UPON THE ADEQUACY OF THE WORK OF THE ENGINEER OF RECORD.

PRIOR TO THE START OF CONSTRUCTION, THE CONTRACTOR SHALL CONTACT THE CITY OF NEW BRAUNFELS TO SCHEDULE A PRECONSTRUCTION MEETING.

FOR PUBLIC INFRASTRUCTURE PERMIT OR GRADING PERMIT PROJECTS:
FOR INSPECTIONS, YOU MUST CALL BEFORE 12:00 P.M., 48 HOURS PRIOR TO YOUR INSPECTION REQUEST.
EACH INSPECTION WILL BE ALLOTTED 1 HOUR UNLESS YOU REQUEST FOR MORE TIME.
ONCE YOUR REQUEST HAS BEEN ACCEPTED, YOU WILL RECEIVE A CALL FROM THE CITY OF NEW BRAUNFELS INSPECTOR.

FOR COMMERCIAL PERMIT (CP) PROJECTS:
ALL INSPECTIONS ARE TO BE CALLED IN AT 830-221-4068 OR,
FAXED IN AT 830-608-2117 OR,
E-MAILED AT INSPECTIONS@NBTEXAS.ORG.

IT IS THE CONTRACTOR'S RESPONSIBILITY TO SEE THAT ALL TEMPORARY AND PERMANENT TRAFFIC CONTROL DEVICES ARE PROPERLY INSTALLED AND MAINTAINED IN ACCORDANCE WITH THE PLANS AND LATEST EDITION OF THE TEXAS MANUAL ON UNIFORM TRAFFIC CONTROL DEVICES. IF, IN THE OPINION OF THE ENGINEERING REPRESENTATIVE AND THE CONSTRUCTION INSPECTOR, THE BARRICADES AND SIGNS DO NOT CONFORM TO ESTABLISHED STANDARDS OR ARE INCORRECTLY PLACED OR ARE INSUFFICIENT IN QUANTITY TO PROTECT THE GENERAL PUBLIC, THE CONSTRUCTION INSPECTOR SHALL HAVE THE OPTION TO STOP OPERATIONS UNTIL SUCH TIME AS THE CONDITIONS ARE CORRECTED. IF THE NEED ARISES, ADDITIONAL TEMPORARY TRAFFIC CONTROL DEVICES MAY BE ORDERED BY THE ENGINEERING REPRESENTATIVE AT THE CONTRACTOR'S EXPENSE.

A TXDOT TYPE II B-B BLUE REFLECTIVE RAISED PAVEMENT MARKER SHALL BE INSTALLED IN THE CENTER OF THE ROADWAY ADJACENT TO ALL FIRE HYDRANTS. IN LOCATIONS WHERE HYDRANTS ARE SITUATED ON CORNERS, BLUE REFLECTIVE RAISED PAVEMENT MARKERS SHALL BE INSTALLED ON BOTH APPROACHES WHICH FRONT THE HYDRANT. THE RAISED PAVEMENT MARKER SHALL MEET TXDOT MATERIAL, EPOXY AND ADHESIVE SPECIFICATIONS.

GROUNDWATER
IT SHALL BE THE RESPONSIBILITY OF THE DEVELOPER, CONTRACTOR, SUBCONTRACTORS, BUILDERS, GEO-TECHNICAL ENGINEER, AND PROJECT ENGINEER TO IMMEDIATELY NOTIFY THE OFFICE OF THE CITY ENGINEER AND PROJECT ENGINEER IF THE PRESENCE OF GROUNDWATER WITHIN THE SITE IS EVIDENT. UPON NOTIFICATION THE PROJECT ENGINEER SHALL RESPOND WITH PLAN REVISIONS FOR THE MITIGATION OF THE GROUNDWATER ISSUE. THE CITY ENGINEER SHALL RESPOND WITHIN TWO (2) BUSINESS DAYS UPON RECEIPT OF THE MITIGATION PLAN. ALL CONSTRUCTION ACTIVITY, IMPACTED BY THE DISCOVERY OF GROUNDWATER, SHALL BE SUSPENDED UNTIL THE CITY ENGINEER GRANTS A WRITTEN APPROVAL OF THE GROUNDWATER MITIGATION PLAN.

RECORD DRAWINGS
AS PER PLATTING ORDINANCE SECTION 118-38M.: WHEN ALL OF THE IMPROVEMENTS ARE FOUND TO BE CONSTRUCTED AND COMPLETED IN ACCORDANCE WITH THE APPROVED PLANS AND SPECIFICATIONS AND WITH THE CITY'S STANDARDS, AND UPON RECEIPT OF ONE SET OF "RECORD DRAWING" PLANS, AND A DIGITAL COPY OF ALL PLANS (PDF COPY) THE CITY ENGINEER SHALL ACCEPT SUCH IMPROVEMENTS FOR THE CITY OF NEW BRAUNFELS, SUBJECT TO THE GUARANTY OF MATERIAL AND WORKMANSHIP PROVISIONS IN THIS SECTION.

CONSTRUCTION NOTE
ENGINEER OF RECORD IS RESPONSIBLE TO ENSURE THAT EROSION CONTROL MEASURES AND STORMWATER CONTROL SUFFICIENT TO MITIGATE OFF SITE IMPACTS ARE IN PLACE AT ALL STAGES OF CONSTRUCTION.

DRAINAGE NOTE
DRAINAGE IMPROVEMENTS SUFFICIENT TO MITIGATE THE IMPACT OF CONSTRUCTION SHALL BE INSTALLED PRIOR TO ADDING IMPERVIOUS COVER.

FINISHED FLOOR ELEVATIONS
THE ELEVATION OF THE LOWEST FLOOR SHALL BE AT LEAST 10 INCHES ABOVE THE FINISHED GRADE OF THE SURROUNDING GROUND, WHICH SHALL BE SLOPED IN A FASHION SO AS TO DIRECT STORMWATER AWAY FROM THE STRUCTURE. PROPERTIES ADJACENT TO STORMWATER CONVEYANCE STRUCTURES MUST HAVE FLOOR SLAB ELEVATION OR BOTTOM OF FLOOR JOISTS A MINIMUM OF ONE FOOT ABOVE THE 100-YEAR WATER FLOW ELEVATION IN THE STRUCTURE. DRIVEWAYS SERVING HOUSES ON THE DOWNHILL SIDE OF THE STREET SHALL HAVE A PROPERLY SIZED CROSS SWALE PREVENTING RUNOFF FROM ENTERING THE GARAGE.

SOILS TESTING
PROCTORS SHALL BE SAMPLED FROM ON-SITE MATERIAL (ON-SITE IS DEFINED AS LIMITS OF CONSTRUCTION FOR THIS

-PLAN SET) AND A COPY OF THE PROCTOR RESULTS SHALL BE DELIVERED TO THE CITY OF NEW BRAUNFELS STREET INSPECTOR PRIOR TO ANY DENSITY TESTS.

ROADWAY
ALL ROADWAY COMPACTION TESTS SHALL BE THE RESPONSIBILITY OF THE DEVELOPER'S GEOTECHNICAL ENGINEER. FLEXIBLE BASE OR FILL/EMBANKMENT MATERIAL SHALL BE PLACED IN UNIFORM LAYERS NOT TO EXCEED EIGHT INCHES (8") LOOSE. THE REQUIRED DENSITY FOR THE FILL/EMBANKMENT MATERIAL SHALL MEET THE REQUIREMENTS OF TXDOT'S SPECIFICATION ITEM 132. THE REQUIRED DENSITY FOR THE FLEXIBLE BASE MATERIAL SHALL MEET THE REQUIREMENTS OF TXDOT'S SPECIFICATION ITEM 247. EACH LAYER OF MATERIAL, INCLUSIVE OF SUBGRADE, SHALL BE COMPACTED AS SPECIFIED AND TESTED FOR DENSITY AND MOISTURE IN ACCORDANCE WITH TEST METHODS TEX-113-E, TEX-114-E, TEX-115-E. THE NUMBER AND LOCATION OF REQUIRED TESTS SHALL BE DETERMINED BY THE GEOTECHNICAL ENGINEER AND APPROVED BY THE CITY OF NEW BRAUNFELS STREET INSPECTOR. AT A MINIMUM, TESTS SHALL BE TAKEN EVERY 200 LF FOR EACH LIFT. UPON COMPLETION OF TESTING, THE GEOTECHNICAL ENGINEER WILL PROVIDE THE CITY OF NEW BRAUNFELS STREET INSPECTOR WITH ALL TESTING DOCUMENTATION AND A CERTIFICATION STATING THAT THE PLACEMENT OF FLEXIBLE BASE, AND FILL MATERIAL, AND SUBGRADE, HAS BEEN COMPLETED IN ACCORDANCE WITH THE PLANS. ADDITIONAL DENSITY TESTS MAY BE REQUESTED BY THE CITY OF NEW BRAUNFELS INSPECTOR.

ITEM 340
ASPHALTIC CONCRETE PAVEMENT SHALL BE THE TYPE OF HOT MIX ASPHALT AS DEFINED IN TXDOT'S STANDARD SPECIFICATIONS FOR CURRENT TXDOT STANDARD SPECIFICATIONS FOR CONSTRUCTION OF HIGHWAYS, STREET AND BRIDGES.

THE CITY OF NEW BRAUNFELS WILL NOT ACCEPT THE USE OF RECYCLED ASPHALT PAVEMENT (RAP) OR RECYCLED ASPHALT SHINGLES (RAS) IN ASPHALT MIXTURES FOR NEW ROADWAYS. ANY DEBRIS INCLUSIONS WITHIN NEW ASPHALT PAVEMENTS WILL RESULT IN ASPHALT REMOVAL AND REPLACEMENT FROM CURB TO CURB FOR LIMITS TO BE DETERMINED BY THE CITY OF NEW BRAUNFELS.

THE ASPHALTIC CONCRETE PAVEMENT SURFACE COURSE SHALL BE PLANT MIXED, HOT LAID TYPE "D" MEETING THE SPECIFICATION REQUIREMENTS OF TXDOT ITEM 340. THE ASPHALTIC CONCRETE PAVEMENT SUB-SURFACE COURSES SHALL BE PLANT MIXED, HOT LAID TYPE "B" MEETING THE SPECIFICATION REQUIREMENTS OF TXDOT ITEM 340. THE MIXTURE SHALL BE DESIGNED PER THE DESIGN REQUIREMENTS SPECIFIED IN TXDOT ITEM 340 AND SHALL BE COMPACTED TO BETWEEN 91 AND 95 PERCENT OF THE MAXIMUM THEORETICAL DENSITY AS DETERMINED BY TXDOT TEST METHOD TEX-227-F. PLACE THE MIXTURE WHEN THE ROADWAY SURFACE TEMPERATURE IS AT OR ABOVE 60°F. COMPLETE ALL COMPACTION OPERATIONS BEFORE THE PAVEMENT TEMPERATURE DROPS BELOW 160°F. THE ASPHALT CEMENT CONTENT BY PERCENT OF TOTAL MIXTURE WEIGHT SHALL FALL WITHIN A TOLERANCE OF ±0.5 PERCENT FROM A SPECIFIC MIX DESIGN.

290 S. CASTELL AVE., STE. 100
NEW BRAUNFELS, TX 78130
TBPE FIRM F-10961
TBPLS FIRM 1053600

HMT
ENGINEERING & SURVEYING

THIS DOCUMENT IS RELEASED FOR THE PURPOSE OF INTERIM REVIEW UNDER THE AUTHORITY OF CHRISTOPHER P. VAN HEERDE P.E. # 93047 ON 6/3/20. IT IS NOT TO BE USED FOR CONSTRUCTION, BIDDING OR PERMIT PURPOSES.

GENERAL NOTES (1 OF 2)

VILLAGE AT GRUENE CONDOMINIUMS

NO.	REVISION DESCRIPTION	REVISION DATE

DATE: JUNE 2020
DRAWN BY: LB
DESIGNED BY: HC
REVIEWED BY: SWH-CVH
HMT PROJECT NO.: 170.004

SHEET
C0.2 PI

Drawing Name: N:_Projects\170 - James Japhet\170.004 - Villages at Gruene Garden Homes\CDs\City Permit\170.004_COVR.dwg User: robertb Jun 03, 2020 - 5:00pm

CITY OF NEW BRAUNFELS CONSTRUCTION NOTES   REVISED 03/2020

UTILITY TRENCH COMPACTION (ADDED TO THE CONSTRUCTION PLANS ON ALL UTILITY PLAN SHEETS).

ALL UTILITY TRENCH COMPACTION TESTS WITHIN THE STREET PAVEMENT/SIDEWALK SECTION SHALL BE THE RESPONSIBILITY OF THE DEVELOPER'S GEOTECHNICAL ENGINEER. FILL MATERIAL SHALL BE PLACED IN UNIFORM LAYERS NOT TO EXCEED TWELVE INCHES (12") LOOSE. DETERMINE THE MAXIMUM LIFT THICKNESS BASED ON THE ABILITY OF THE COMPACTING OPERATION AND EQUIPMENT USED TO MEET THE REQUIRED DENSITY. EACH LAYER OF MATERIAL SHALL BE COMPACTED TO A MINIMUM 95% DENSITY AND TESTED FOR DENSITY AND MOISTURE IN ACCORDANCE WITH TEST METHODS TEX–113–E, TEX–114–E, TEX–115–E. THE NUMBER AND LOCATION OF REQUIRED TESTS SHALL BE DETERMINED BY THE GEOTECHNICAL ENGINEER AND APPROVED BY THE CITY OF NEW BRAUNFELS STREET INSPECTOR. AT A MINIMUM, TESTS SHALL BE TAKEN EVERY 200 LF FOR EACH LIFT AND EVERY OTHER SERVICE LINE. UPON COMPLETION OF TESTING THE GEOTECHNICAL ENGINEER SHALL PROVIDE THE CITY OF NEW BRAUNFELS STREET INSPECTOR WITH ALL TESTING DOCUMENTATION AND A CERTIFICATION STATING THAT THE PLACEMENT OF FILL MATERIAL HAS BEEN COMPLETED IN ACCORDANCE WITH THE PLANS. ADDITIONAL DENSITY TESTS MAY BE REQUESTED BY THE CITY OF NEW BRAUNFELS INSPECTOR.

<u>CURB CUT DUE TO CONSTRUCTION OF NEW RIGHT–OF–WAY CONSTRUCTION</u>

(INDICATE THE 2 OPTIONS ON THE CONSTRUCTION PLANS).

1. SAWCUT EXISTING STREET AND MATCH TO NEW CONSTRUCTION.
2. SAWCUT EXISTING CURB TO TIE INTO EXISTING CONSTRUCTION.

<u>CONSTRUCTION STABILIZED ENTRANCE</u>

SAWCUT CURB FOR CONSTRUCTION ENTRANCE.

STABILIZED CONSTRUCTION AREA SHALL BE CONSTRUCTED OF 3"X5" ROCK TO BE PLACED A MINIMUM LENGTH OF 25–FT. AND MAINTAINED SO THAT CONSTRUCTION DEBRIS DOES NOT FALL WITHIN THE CITY RIGHT–OF–WAY. RIGHTOF–WAY MUST BE CLEARED FROM MUD, ROCKS, ETC. AT ALL TIMES.

(NOTES TO BE PLACED ON ALL WW PLAN & DETAIL SHEETS)

ENSURE ALL DRIVEWAY APPROACHES ARE BUILT IN GENERAL ACCORDANCE WITH A.D.A. SPECIFICATIONS. NO VALVES, HYDRANTS, ETC. SHALL BE CONSTRUCTED WITHIN CURBS, SIDEWALKS, OR DRIVEWAYS.

<u>SIGNING AND PAVEMENT MARKING PLAN NOTES</u>

THE CONTRACTOR SHALL FURNISH AND INSTALL ALL REGULATORY AND WARNING SIGNS, STREETS NAME SIGNS AND SIGN MOUNTS IN ACCORDANCE WITH APPROVED ENGINEERING PLANS. THE CITY WILL INSPECT ALL SIGNS AT FINAL INSPECTION.

THE CONTRACTOR SHALL INSTALL ALL PAVEMENT MARKINGS IN ACCORDANCE WITH APPROVED ENGINEERING PLANS. THE CONTRACTOR SHALL NOTIFY THE CITY AT LEAST TWENTY–FOUR (24 HOURS PRIOR TO THE INSTALLATION OF ALL SEALER AND FINAL MARKINGS. THE CITY WILL INSPECT ALL MARKINGS AT FINAL APPLICATION.

SEEDING AND ESTABLISHMENT OF VEGETATION WITHIN EARTHEN CHANNELS, STORMWATER BASINS AND DISTURBED AREAS

SEEDING FOR THE PURPOSE OF ESTABLISHING VEGETATION WITHIN CONSTRUCTED EARTHEN CHANNELS, BASINS AND DISTURBED AREAS SHALL BE CONDUCTED IN ACCORDANCE WITH ITEM 164 (SEEDING FOR EROSION CONTROL OF TXDOT'S STANDARD SPECIFICATIONS FOR CONSTRUCTION AND MAINTENANCE OF HIGHWAYS, STREETS AND BRIDGES MANUAL. ONLY SEED TYPES AND MIXES SPECIFIED FOR THE SAN ANTONIO DISTRICT (DISTRICT 15 IN TABLES 1 AND 2 UNDER ITEM 164 SHALL BE UTILIZED. DURING THE COOL SEASON (SEPT 1–NOV 30, CEREAL RYE AND SEED SPECIES SPECIFIED FOR THE SAN ANTONIO DISTRICT IN TABLE 3 MAY BE USED. FOR COOL SEASON SEEDING APPLICATIONS, COOL SEASON SEED MIXES SHALL BE USED IN CONJUNCTION WITH SEED MIXES FOR THE SAN ANTONIO DISTRICT AS SPECIFIED IN TABLE 1 AND 2 UNDER ITEM 164.

IT MAY BE DEEMED NECESSARY TO INCORPORATE TOPSOIL AND SOIL AMENDMENTS (I.E. COMPOST/ FERTILIZER INTO EXISTING SOIL IN ORDER TO FACILITATE VEGETATION GROWTH. TOPSOIL, COMPOST AND FERTILIZER ADDITIONS SHALL BE CONDUCTED ACCORDING TO ITEMS 160, 161 AND 166 OF TXDOT'S STANDARD SPECIFICATIONS MANUAL, RESPECTIVELY.

AREAS REQUIRING PERMANENT VEGETATION (EARTHEN CHANNELS, PONDS, ETC.) ARE REQUIRED TO MEET TXDOT SPECIFICATIONS FOR ITEM 160 TOPSOIL. TESTING PER TEX–128–E WILL BE REQUIRED AT THE CITY'S REQUEST.

WATERING MAY ALSO BE NECESSARY TO FACILITATE AND EXPEDITE THE SPROUTING AND GROWTH OF VEGETATION. ITEM 168 OF TXDOT'S STANDARD SPECIFICATIONS MANUAL SHALL BE ADHERED TO FOR VEGETATIVE WATERING.

IF EXTENDED DROUGHT CONDITIONS EXIST THAT HINDER OR PROHIBIT THE GROWTH AND ESTABLISHMENT OF VEGETATION, THE CONTRACTOR/ DEVELOPER SHALL PROVIDE A PLAN TO THE CITY OF NEW BRAUNFELS DESCRIBING THE MEASURES THAT WILL BE TAKEN TO STABILIZE EARTHEN DRAINAGE INFRASTRUCTURE UNTIL A TIME WHEN GROWING CONDITIONS BECOME MORE FAVORABLE.

TEXAS COMMISSION ON ENVIRONMENTAL QUALITY ORGANIZED SEWAGE COLLECTION SYSTEM GENERAL CONSTRUCTION NOTES

1. THIS ORGANIZED SEWAGE COLLECTION SYSTEM (SCS) MUST BE CONSTRUCTED IN ACCORDANCE WITH 30 TEXAS ADMINISTRATIVE CODE (TAC) §213.5(C), THE TEXAS COMMISSION ON ENVIRONMENTAL QUALITY'S (TCEQ) EDWARDS AQUIFER RULES AND ANY LOCAL GOVERNMENT STANDARD SPECIFICATIONS.

2. ALL CONTRACTORS CONDUCTING REGULATED ACTIVITIES ASSOCIATED WITH THIS PROPOSED REGULATED PROJECT MUST BE PROVIDED WITH COPIES OF THE SCS PLAN AND THE TCEQ LETTER INDICATING THE SPECIFIC CONDITIONS OF ITS APPROVAL. DURING THE COURSE OF THESE REGULATED ACTIVITIES, THE CONTRACTORS MUST BE REQUIRED TO KEEP ON–SITE COPIES OF THE PLAN AND THE APPROVAL LETTER.

3. A WRITTEN NOTICE OF CONSTRUCTION MUST BE SUBMITTED TO THE PRESIDING TCEQ REGIONAL OFFICE AT LEAST 48 HOURS PRIOR TO THE START OF ANY REGULATED ACTIVITIES. THIS NOTICE MUST INCLUDE:
- THE NAME OF THE APPROVED PROJECT;
- THE ACTIVITY START DATE; AND
- THE CONTACT INFORMATION OF THE PRIME CONTRACTOR.

4. ANY MODIFICATION TO THE ACTIVITIES DESCRIBED IN THE REFERENCED SCS APPLICATION FOLLOWING THE DATE OF APPROVAL MAY REQUIRE THE SUBMITTAL OF AN SCS APPLICATION TO MODIFY THIS APPROVAL, INCLUDING THE PAYMENT OF APPROPRIATE FEES AND ALL INFORMATION NECESSARY FOR ITS REVIEW AND APPROVAL.

5. PRIOR TO BEGINNING ANY CONSTRUCTION ACTIVITY, ALL TEMPORARY EROSION AND SEDIMENTATION (E&S) CONTROL MEASURES MUST BE PROPERLY INSTALLED AND MAINTAINED IN ACCORDANCE WITH THE MANUFACTURERS SPECIFICATIONS. THESE CONTROLS MUST REMAIN IN PLACE UNTIL THE DISTURBED AREAS HAVE BEEN PERMANENTLY STABILIZED.

6. IF ANY SENSITIVE FEATURES ARE DISCOVERED DURING THE WASTEWATER LINE TRENCHING ACTIVITIES, ALL REGULATED ACTIVITIES NEAR THE SENSITIVE FEATURE MUST BE SUSPENDED IMMEDIATELY. THE APPLICANT MUST IMMEDIATELY NOTIFY THE APPROPRIATE REGIONAL OFFICE OF THE TCEQ OF THE FEATURE DISCOVERED. A GEOLOGIST'S ASSESSMENT OF THE LOCATION AND EXTENT OF THE FEATURE DISCOVERED MUST BE REPORTED TO THAT REGIONAL OFFICE IN WRITING AND THE APPLICANT MUST SUBMIT A PLAN FOR ENSURING THE STRUCTURAL INTEGRITY OF THE SEWER LINE OR FOR MODIFYING THE PROPOSED COLLECTION SYSTEM ALIGNMENT AROUND THE FEATURE. THE REGULATED ACTIVITIES NEAR THE SENSITIVE FEATURE MAY NOT PROCEED UNTIL THE TCEQ–0596 (REV. JULY 15, 2015) PAGE 2 OF 6 EXECUTIVE DIRECTOR HAS REVIEWED AND APPROVED THE METHODS PROPOSED TO PROTECT THE SENSITIVE FEATURE AND THE EDWARDS AQUIFER FROM ANY POTENTIALLY ADVERSE IMPACTS TO WATER QUALITY WHILE MAINTAINING THE STRUCTURAL INTEGRITY OF THE LINE.

7. SEWER LINES LOCATED WITHIN OR CROSSING THE 5–YEAR FLOODPLAIN OF A DRAINAGE WAY WILL BE PROTECTED FROM INUNDATION AND STREAM VELOCITIES WHICH COULD CAUSE EROSION AND SCOURING OF BACKFILL. THE TRENCH MUST BE CAPPED WITH CONCRETE TO PREVENT SCOURING OF BACKFILL, OR THE SEWER LINES MUST BE ENCASED IN CONCRETE. ALL CONCRETE SHALL HAVE A MINIMUM THICKNESS OF 6 INCHES.

8. BLASTING PROCEDURES FOR PROTECTION OF EXISTING SEWER LINES AND OTHER UTILITIES WILL BE IN ACCORDANCE WITH THE NATIONAL FIRE PROTECTION ASSOCIATION CRITERIA. SAND IS NOT ALLOWED AS BEDDING OR BACKFILL IN TRENCHES THAT HAVE BEEN BLASTED. IF ANY EXISTING SEWER LINES ARE DAMAGED, THE LINES MUST BE REPAIRED AND RETESTED.

9. ALL MANHOLES CONSTRUCTED OR REHABILITATED ON THIS PROJECT MUST HAVE WATERTIGHT SIZE ON SIZE RESILIENT CONNECTORS ALLOWING FOR DIFFERENTIAL SETTLEMENT. IF MANHOLES ARE CONSTRUCTED WITHIN THE 100–YEAR FLOODPLAIN, THE COVER MUST HAVE A GASKET AND BE BOLTED TO THE RING. WHERE GASKETED MANHOLE COVERS ARE REQUIRED FOR MORE THAN THREE MANHOLES IN SEQUENCE OR FOR MORE THAN 1,500 FEET, ALTERNATE MEANS OF VENTING WILL BE PROVIDED. BRICKS ARE NOT AN ACCEPTABLE CONSTRUCTION MATERIAL FOR ANY PORTION OF THE MANHOLE.

THE DIAMETER OF THE MANHOLES MUST BE A MINIMUM OF FOUR FEET AND THE MANHOLE FOR ENTRY MUST HAVE A MINIMUM CLEAR OPENING DIAMETER OR 30 INCHES. THESE DIMENSIONS AND OTHER DETAILS SHOWING COMPLIANCE WITH THE COMMISSION'S RULES CONCERNING MANHOLES AND SEWER LINE/MANHOLE INVERTS DESCRIBED IN 30 TAC §217.55 ARE INCLUDED ON PLAN SHEET C8.6.

IT IS SUGGESTED THAT ENTRANCE INTO MANHOLES IN EXCESS OF FOUR FEET DEEP BE ACCOMPLISHED BY MEANS OF A PORTABLE LADDER. THE INCLUSION OF STEPS IN A MANHOLE IS PROHIBITED.

10. WHERE WATER LINES AND NEW SEWER LINES ARE INSTALLED WITH A SEPARATION DISTANCE CLOSER THAN NINE FEET (I.E., WATER LINES CROSSING WASTEWATER LINES, WATER LINES PARALLELING WASTEWATER LINES, OR WATER LINES NEXT TO MANHOLES) THE INSTALLATION MUST MEET THE REQUIREMENTS OF 30 TAC §217.53 (D) (PIPE DESIGN) OR 30 TAC §290.44(E) (WATER DISTRIBUTION).

11. WHERE SEWER LINES DEVIATE FROM STRAIGHT ALIGNMENT AND UNIFORM GRADE ALL CURVATURE OF SEWER PIPE MUST BE ACHIEVED BY THE FOLLOWING PROCEDURE WHICH IS RECOMMENDED BY THE PIPE MANUFACTURER:

<u>THERE WILL BE NO DEVIATION FROM STRAIGHT ALIGNMENTS.</u>

IF PIPE FLEXURE IS PROPOSED, THE FOLLOWING METHOD OF PREVENTING DEFLECTION OF THE JOINT MUST BE USED:

<u>PIPE FLEXURE IS NOT PROPOSED.</u>

SPECIFIC CARE MUST BE TAKEN TO ENSURE THAT THE JOINT IS PLACED IN THE CENTER OF THE TRENCH AND PROPERLY BEDDED IN ACCORDANCE WITH 30 TAC §217.54.

12. NEW SEWAGE COLLECTION SYSTEM LINES MUST BE CONSTRUCTED WITH STUB OUTS FOR THE CONNECTION OF ANTICIPATED EXTENSIONS. THE LOCATION OF SUCH STUB–OUTS MUST BE MARKED ON THE GROUND SUCH THAT THEIR LOCATION CAN BE EASILY DETERMINED AT THE TIME OF CONNECTION OF THE EXTENSIONS. SUCH STUB–OUTS MUST BE MANUFACTURED WYES OR TEES THAT ARE COMPATIBLE IN SIZE AND MATERIAL WITH BOTH THE SEWER LINE AND THE EXTENSION. AT THE TIME OF ORIGINAL CONSTRUCTION, NEW STUB–OUTS MUST BE CONSTRUCTED SUFFICIENTLY TO EXTEND BEYOND END OF THE STREET PAVEMENT. ALL STUB–OUTS MUST BE SEALED WITH A MANUFACTURED CAP TO PREVENT LEAKAGE. EXTENSIONS THAT WERE NOT ANTICIPATED AT THE TIME OF ORIGINAL CONSTRUCTION OR THAT ARE TO BE CONNECTED TO AN EXISTING SEWER LINE NOT FURNISHED WITH STUB–OUTS MUST BE CONNECTED USING A MANUFACTURED SADDLE AND IN ACCORDANCE WITH ACCEPTED PLUMBING TECHNIQUES.

13. IF NO STUB–OUT IS PRESENT AN ALTERNATE METHOD OF JOINING LATERALS IS SHOWN IN THE DETAIL ON PLAN SHEET C8.6. (FOR POTENTIAL FUTURE LATERALS).

14. THE PRIVATE SERVICE LATERAL STUB–OUTS MUST BE INSTALLED AS SHOWN ON THE PLAN AND PROFILE SHEETS ON PLAN SHEET C8.6 AND MARKED AFTER BACKFILLING AS SHOWN IN THE DETAIL ON PLAN SHEET C8.6.

15. TRENCHING, BEDDING AND BACKFILL MUST CONFORM 30 TAC §217.54. THE BEDDING AND BACKFILL FOR FLEXIBLE PIPE MUST COMPLY WITH THE STANDARDS OF ASTM D–2321, CLASSES IA, IB, II OR III. RIGID PIPE BEDDING MUST COMPLY WITH THE REQUIREMENTS OF ASTM C 12 (ANSI A 106.2) CLASSES A, B OR C.

16. SEWER LINES MUST BE TESTED FROM MANHOLE TO MANHOLE. WHEN A NEW SEWER LINE IS CONNECTED TO AN EXISTING STUB OR CLEAN–OUT, IT MUST BE TESTED FROM EXISTING MANHOLE TO NEW MANHOLE. IF A STUB OR CLEAN–OUT IS USED AT THE END OF THE PROPOSED SEWER LINE, NO PRIVATE SERVICE ATTACHMENTS MAY BE CONNECTED BETWEEN THE LAST MANHOLE AND THE CLEAN–OUT UNLESS IT CAN BE CERTIFIED AS CONFORMING WITH THE PROVISIONS OF 30 TAC §213.5(C)(3)(E).

17. ALL SEWER LINES MUST BE TESTED IN ACCORDANCE WITH 30 TAC §217.57. THE ENGINEER MUST RETAIN COPIES OF ALL TEST RESULTS WHICH MUST BE MADE AVAILABLE TO THE EXECUTIVE DIRECTOR UPON REQUEST. THE ENGINEER MUST CERTIFY IN WRITING THAT ALL WASTEWATER LINES HAVE PASSED ALL REQUIRED TESTING TO THE APPROPRIATE REGIONAL OFFICE WITHIN 30 DAYS OF TEST COMPLETION AND PRIOR TO USE OF THE NEW COLLECTION SYSTEM. TESTING METHOD WILL BE:

(a) FOR A COLLECTION SYSTEM PIPE THAT WILL TRANSPORT WASTEWATER BY GRAVITY FLOW, THE DESIGN MUST SPECIFY AN INFILTRATION AND EXFILTRATION TEST OR A LOW–PRESSURE AIR TEST. A TEST MUST CONFORM TO THE FOLLOWING REQUIREMENTS:

(1) LOW PRESSURE AIR TEST.

(A) A LOW PRESSURE AIR TEST MUST FOLLOW THE PROCEDURES DESCRIBED IN AMERICAN SOCIETY FOR TESTING AND MATERIALS (ASTM) C–828, ASTM C–924, ASTM F–1417 OR OTHER PROCEDURES APPROVED BY THE EXECUTIVE DIRECTOR, EXCEPT AS TO TESTING TIMES AS REQUIRED IN TABLE C.3 IN SUBPARAGRAPH (C) OF THIS PARAGRAPH OR EQUATION C.3 IN SUBPARAGRAPH (B)(ii) OF THIS PARAGRAPH.

(B) FOR SECTIONS OF COLLECTION SYSTEM PIPE LESS THAN 36 INCH AVERAGE INSIDE DIAMETER, THE FOLLOWING PROCEDURE MUST APPLY, UNLESS A PIPE IS TO BE TESTED AS REQUIRED BY PARAGRAPH (2) OF THIS SUBSECTION.

(i) A PIPE MUST BE PRESSURIZED TO 3.5 POUNDS PER SQUARE INCH (PSI) GREATER THAN THE PRESSURE EXERTED BY GROUND WATER ABOVE THE PIPE.

(ii) ONCE THE PRESSURE IS STABILIZED THE MINIMUM TIME ALLOWABLE FOR THE PRESSURE TO DROP FROM 3.5 PSI GAUGE TO 2.5 PSI GAUGE IS COMPUTED FROM THE FOLLOWING EQUATION:

EQUATION C.3

$$T = \frac{0.085\ x\ D\ x\ K}{Q}$$

WHERE:

T = TIME FOR PRESSURE TO DROP 1.0 POUND PER SQUARE INCH GAUGE IN SECONDS
K = 0.000419 X D X L, BUT NOT LESS THAN 1.0
D = AVERAGE INSIDE PIPE DIAMETER IN INCHES
L = LENGTH OF LINE OF SAME SIZE BEING TESTED, IN FEET
Q = RATE OF LOSS, 0.0015 CUBIC FEET PER MINUTE PER SQUARE FOOT INTERNAL SURFACE WILL BE USED.

(C) SINCE A "K" VALUE OF LESS THAN 1.0 MAY NOT BE USED, THE MINIMUM TESTING TIME FOR EACH PIPE DIAMETER IS SHOWN IN THE FOLLOWING TABLE C.3:

PIPE DIAMETER (INCHES)	MINIMUM TIME (SECONDS)	LENGTH FOR MINIMUM (FEET)	TIME FOR LONGER LENGTH (SECONDS)
6	340	398	0.855
8	454	298	1.520
10	567	239	2.374
12	680	199	3.419
15	850	159	5.342
18	1020	133	7.693
21	1190	114	10.471
24	1360	100	13.676
27	1530	88	17.309
30	1700	80	21.369
33	1870	72	25.856

(D) AN OWNER MAY STOP A TEST IF NO PRESSURE LOSS HAS OCCURRED DURING THE FIRST 25% OF THE CALCULATED TESTING TIME.

(E) IF ANY PRESSURE LOSS OR LEAKAGE HAS OCCURRED DURING THE FIRST 25% OF A TESTING PERIOD, THEN THE TEST MUST CONTINUE FOR THE ENTIRE TEST DURATION AS OUTLINED ABOVE OR UNTIL FAILURE.

(F) WASTEWATER COLLECTION SYSTEM PIPES WITH A 27 INCH OR LARGER AVERAGE INSIDE DIAMETER MAY BE AIR TESTED AT EACH JOINT INSTEAD OF FOLLOWING THE PROCEDURE OUTLINED IN THIS SECTION.

(G) A TESTING PROCEDURE FOR PIPE WITH AN INSIDE DIAMETER GREATER THAN 33 INCHES MUST BE APPROVED BY THE EXECUTIVE DIRECTOR.

(2) INFILTRATION/EXFILTRATION TEST.

(A) THE TOTAL EXFILTRATION, AS DETERMINED BY A HYDROSTATIC HEAD TEST, MUST NOT EXCEED 50 GALLONS PER INCH OF DIAMETER PER MILE OF PIPE PER 24 HOURS AT A MINIMUM TEST HEAD OF 2.0 FEET ABOVE THE CROWN OF A PIPE AT AN UPSTREAM MANHOLE.

(B) AN OWNER SHALL USE AN INFILTRATION TEST IN LIEU OF AN EXFILTRATION TEST WHEN PIPES ARE INSTALLED BELOW THE GROUNDWATER LEVEL.

(C) THE TOTAL EXFILTRATION, AS DETERMINED BY A HYDROSTATIC HEAD TEST, MUST NOT EXCEED 50 GALLONS PER INCH DIAMETER PER MILE OF PIPE PER 24 HOURS AT A MINIMUM TEST HEAD OF TWO FEET ABOVE THE CROWN OF A PIPE AT AN UPSTREAM MANHOLE, OR AT LEAST TWO FEET ABOVE EXISTING GROUNDWATER LEVEL, WHICHEVER IS GREATER.

(D) FOR CONSTRUCTION WITHIN A 25–YEAR FLOOD PLAIN, THE INFILTRATION OR EXFILTRATION MUST NOT EXCEED 10 GALLONS PER INCH DIAMETER PER MILE OF PIPE PER 24 HOURS AT THE SAME MINIMUM TEST HEAD AS IN SUBPARAGRAPH (C) OF THIS PARAGRAPH.

(E) IF THE QUANTITY OF INFILTRATION OR EXFILTRATION EXCEEDS THE MAXIMUM QUANTITY SPECIFIED, AN OWNER SHALL UNDERTAKE REMEDIAL ACTION IN ORDER TO REDUCE THE INFILTRATION OR EXFILTRATION TO AN AMOUNT WITHIN THE LIMITS SPECIFIED. AN OWNER SHALL RETEST A PIPE FOLLOWING A REMEDIATION ACTION.

(b) IF A GRAVITY COLLECTION PIPE IS COMPOSED OF FLEXIBLE PIPE, DEFLECTION TESTING IS ALSO REQUIRED. THE FOLLOWING PROCEDURES MUST BE FOLLOWED:

(1) FOR A COLLECTION PIPE WITH INSIDE DIAMETER LESS THAN 27 INCHES, DEFLECTION MEASUREMENT REQUIRES A RIGID MANDREL.

(A) MANDREL SIZING.
(i) A RIGID MANDREL MUST HAVE AN OUTSIDE DIAMETER (OD) NOT LESS THAN 95% OF THE BASE INSIDE DIAMETER (ID) OR AVERAGE ID OF A PIPE, AS SPECIFIED IN THE APPROPRIATE STANDARD BY THE ASTMs, AMERICAN WATER WORKS ASSOCIATION, UNI–BELL, OR AMERICAN NATIONAL STANDARDS INSTITUTE, OR ANY RELATED APPENDIX.
(ii) IF A MANDREL SIZING DIAMETER IS NOT SPECIFIED IN THE APPROPRIATE STANDARD, THE MANDREL MUST HAVE AN OD EQUAL TO 95% OF THE ID OF A PIPE. IN THIS CASE, THE ID OF THE PIPE, FOR THE PURPOSE OF DETERMINING THE OD OF THE MANDREL, MUST EQUAL THE AVERAGE OUTSIDE DIAMETER MINUS TWO MINIMUM WALL THICKNESSES FOR OD CONTROLLED PIPE AND THE AVERAGE INSIDE DIAMETER FOR ID CONTROLLED PIPE.
(iii) ALL DIMENSIONS MUST MEET THE APPROPRIATE STANDARD.

(B) MANDREL DESIGN.
(i) A RIGID MANDREL MUST BE CONSTRUCTED OF A METAL OR A RIGID PLASTIC MATERIAL THAT CAN WITHSTAND 200 PSI WITHOUT BEING DEFORMED.
(ii) A MANDREL MUST HAVE NINE OR MORE ODD NUMBER OF RUNNERS OR LEGS.
(iii) A BARREL SECTION LENGTH MUST EQUAL AT LEAST 75% OF THE INSIDE DIAMETER OF A PIPE.
(iv) EACH SIZE MANDREL MUST USE A SEPARATE PROVING RING.

(C) METHOD OPTIONS.
(i) AN ADJUSTABLE OR FLEXIBLE MANDREL IS PROHIBITED.
(ii) A TEST MAY NOT USE TELEVISION INSPECTION AS A SUBSTITUTE FOR A DEFLECTION TEST.
(iii) IF REQUESTED, THE EXECUTIVE DIRECTOR MAY APPROVE THE USE OF A DEFLECTOMETER OR A MANDREL WITH REMOVABLE LEGS OR RUNNERS ON A CASE–BY–CASE BASIS.

(2) FOR A GRAVITY COLLECTION SYSTEM PIPE WITH AN INSIDE DIAMETER 27 INCHES AND GREATER, OTHER TEST METHODS MAY BE USED TO DETERMINE VERTICAL DEFLECTION.
(3) A DEFLECTION TEST METHOD MUST BE ACCURATE TO WITHIN PLUS OR MINUS 0.2% DEFLECTION.
(4) AN OWNER SHALL NOT CONDUCT A DEFLECTION TEST UNTIL AT LEAST 30 DAYS AFTER THE FINAL BACKFILL.
(5) GRAVITY COLLECTION SYSTEM PIPE DEFLECTION MUST NOT EXCEED FIVE PERCENT (5%).
(6) IF A PIPE SECTION FAILS A DEFLECTION TEST, AN OWNER SHALL CORRECT THE PROBLEM AND CONDUCT A SECOND TEST AFTER THE FINAL BACKFILL HAS BEEN IN PLACE AT LEAST 30 DAYS.

18. ALL MANHOLES MUST BE TESTED TO MEET OR EXCEED THE REQUIREMENTS OF 30 TAC §217.58.
(a) ALL MANHOLES MUST PASS A LEAKAGE TEST.
(b) AN OWNER SHALL TEST EACH MANHOLE (AFTER ASSEMBLY AND BACKFILLING) FOR LEAKAGE, SEPARATE AND INDEPENDENT OF THE COLLECTION SYSTEM PIPES, BY HYDROSTATIC EXFILTRATION TESTING, VACUUM TESTING, OR OTHER METHOD APPROVED BY THE EXECUTIVE DIRECTOR.
(1) HYDROSTATIC TESTING.
(A) THE MAXIMUM LEAKAGE FOR HYDROSTATIC TESTING OR ANY ALTERNATIVE TEST METHODS IS 0.025 GALLONS PER FOOT DIAMETER PER FOOT OF MANHOLE DEPTH PER HOUR.
(B) TO PERFORM A HYDROSTATIC EXFILTRATION TEST, AN OWNER SHALL SEAL ALL WASTEWATER PIPES COMING INTO A MANHOLE WITH AN INTERNAL PIPE PLUG, FILL THE MANHOLE WITH WATER, AND MAINTAIN THE TEST FOR AT LEAST ONE HOUR.
(C) A TEST FOR CONCRETE MANHOLES MAY USE A 24–HOUR WETTING PERIOD BEFORE TESTING TO ALLOW SATURATION OF THE CONCRETE.
(2) VACUUM TESTING.
(A) TO PERFORM A VACUUM TEST, AN OWNER SHALL PLUG ALL LIFT HOLES AND EXTERIOR JOINTS WITH A NON–SHRINK GROUT AND PLUG ALL PIPES ENTERING A MANHOLE.
(B) NO GROUT MUST BE PLACED IN HORIZONTAL JOINTS BEFORE TESTING.
(C) STUB–OUTS, MANHOLE BOOTS, AND PIPE PLUGS MUST BE SECURED TO PREVENT MOVEMENT WHILE A VACUUM IS DRAWN.
(D) AN OWNER SHALL USE A MINIMUM 60 INCH/LB TORQUE WRENCH TO TIGHTEN THE EXTERNAL CLAMPS THAT SECURE A TEST COVER TO THE TOP OF A MANHOLE.
(E) A TEST HEAD MUST BE PLACED AT THE INSIDE OF THE TOP OF A CONE SECTION AND THE SEAL INFLATED IN ACCORDANCE WITH THE MANUFACTURER'S RECOMMENDATIONS.
(F) THERE MUST BE A VACUUM OF 10 INCHES OF MERCURY INSIDE A MANHOLE TO PERFORM A VALID TEST.
(G) A TEST DOES NOT BEGIN UNTIL AFTER THE VACUUM PUMP IS OFF.
(H) A MANHOLE PASSES THE TEST IF AFTER 2.0 MINUTES AND WITH ALL VALVES CLOSED, THE VACUUM IS AT LEAST 9.0 INCHES OF MERCURY.

19. ALL PRIVATE SERVICE LATERALS MUST BE INSPECTED AND CERTIFIED IN ACCORDANCE WITH 30 TAC §213.5(c)(3)(I). AFTER INSTALLATION OF AND, PRIOR TO COVERING AND CONNECTING A PRIVATE SERVICE LATERAL TO AN EXISTING ORGANIZED SEWAGE COLLECTION SYSTEM, A TEXAS LICENSED PROFESSIONAL ENGINEER, TEXAS REGISTERED SANITARIAN, OR APPROPRIATE CITY INSPECTOR MUST VISUALLY INSPECT THE PRIVATE SERVICE LATERAL AND THE CONNECTION TO THE SEWAGE COLLECTION SYSTEM, AND CERTIFY THAT IT IS CONSTRUCTED IN CONFORMITY WITH THE APPLICABLE PROVISIONS OF THIS SECTION. THE OWNER OF THE COLLECTION SYSTEM MUST MAINTAIN SUCH CERTIFICATIONS FOR FIVE YEARS AND FORWARD COPIES TO THE APPROPRIATE REGIONAL OFFICE UPON REQUEST. CONNECTIONS MAY ONLY BE MADE TO AN APPROVED SEWAGE COLLECTION SYSTEM.

AUSTIN REGIONAL OFFICE 2800 S. IH 35, SUITE 100 AUSTIN, TX 78704–5712 PHONE(512) 339–2929 FAX (512) 339–3795	SAN ANTONIO REGIONAL OFFICE 14250 JUDSON ROAD SAN ANTONIO, TEXAS 78233–4480 PHONE (210) 490–3096 FAX (210) 545–4329

TCEQ–0596 (REV. JULY 15, 2015)

TEXAS COMMISSION ON ENVIRONMENTAL QUALITY WATER POLLUTION ABATEMENT PLAN GENERAL CONSTRUCTION NOTES

1. A WRITTEN NOTICE OF CONSTRUCTION MUST BE SUBMITTED TO THE TCEQ REGIONAL OFFICE AT LEAST 48 HOURS PRIOR TO THE START OF ANY REGULATED ACTIVITIES. THIS NOTICE MUST INCLUDE:
- THE NAME OF THE APPROVED PROJECT;
- THE ACTIVITY START DATE; AND
- THE CONTACT INFORMATION OF THE PRIME CONTRACTOR.

2. ALL CONTRACTORS CONDUCTING REGULATED ACTIVITIES ASSOCIATED WITH THIS PROJECT MUST BE PROVIDED WITH COMPLETE COPIES OF THE APPROVED WATER POLLUTION ABATEMENT PLAN (WPAP) AND THE TCEQ LETTER INDICATING THE SPECIFIC CONDITIONS OF ITS APPROVAL. DURING THE COURSE OF THESE REGULATED ACTIVITIES, THE CONTRACTORS ARE REQUIRED TO KEEP ON–SITE COPIES OF THE APPROVED PLAN AND APPROVAL LETTER.

3. IF ANY SENSITIVE FEATURE(S) (CAVES, SOLUTION CAVITY, SINK HOLE, ETC.) IS DISCOVERED DURING CONSTRUCTION, ALL REGULATED ACTIVITIES NEAR THE SENSITIVE FEATURE MUST BE SUSPENDED IMMEDIATELY. THE APPROPRIATE TCEQ REGIONAL OFFICE MUST BE IMMEDIATELY NOTIFIED OF ANY SENSITIVE FEATURES ENCOUNTERED DURING CONSTRUCTION. CONSTRUCTION ACTIVITIES NOT BE RESUMED UNTIL THE TCEQ HAS REVIEWED AND APPROVED THE APPROPRIATE PROTECTIVE MEASURES IN ORDER TO PROTECT ANY SENSITIVE FEATURE AND THE EDWARDS AQUIFER FROM POTENTIALLY ADVERSE IMPACTS TO WATER QUALITY.

4. NO TEMPORARY OR PERMANENT HAZARDOUS SUBSTANCE STORAGE TANK SHALL BE INSTALLED WITHIN 150 FEET OF A WATER SUPPLY SOURCE, DISTRIBUTION SYSTEM, WELL, OR SENSITIVE FEATURE.

5. PRIOR TO BEGINNING ANY CONSTRUCTION ACTIVITY, ALL TEMPORARY EROSION AND SEDIMENTATIONS (E&S) CONTROL MEASURES MUST BE PROPERLY INSTALLED AND MAINTAINED IN ACCORDANCE WITH THE APPROVED PLANS AND MANUFACTURERS SPECIFICATIONS. IF INSPECTIONS INDICATE A CONTROL HAS BEEN USED INAPPROPRIATELY, OR INCORRECTLY, THE APPLICANT MUST REPLACE OR MODIFY THE CONTROL FOR SITE SITUATIONS. THESE CONTROLS MUST REMAIN IN PLACE UNTIL THE DISTURBED AREAS HAVE BEEN PERMANENTLY STABILIZED.

6. ANY SEDIMENT THAT ESCAPES THE CONSTRUCTION SITE MUST BE COLLECTED AND PROPERLY DISPOSED OF BEFORE THE NEXT RAIN EVENT TO ENSURE IT IS NOT WASHED INTO SURFACE STEAMS, SENSITIVE FEATURES, ETC.

7. SEDIMENT MUST BE REMOVED FROM THE SEDIMENT TRAPS OR SEDIMENTATION BASINS NOT LATER THAN WHEN IT OCCUPIES 50% OF THE BASIN'S DESIGN CAPACITY.

8. LITTER, CONSTRUCTION DEBRIS, AND CONSTRUCTION CHEMICALS EXPOSED TO STORMWATER SHALL BE PREVENTED FROM BEING DISCHARGED OFFSITE.

9. ALL SPOILS (EXCAVATED MATERIAL) GENERATED FROM THE PROJECT SITE MUST BE STORED ON–SITE WITH PROPER E&S CONTROLS. FOR STORAGE OR DISPOSAL OF SPOILS AT ANOTHER SITE ON THE EDWARD AQUIFER RECHARGE ZONE, THE OWNER OF THE SITE MUST RECEIVE APPROVAL OF A WATER POLLUTION ABATEMENT PLAN FOR THE PLACEMENT OF FILL MATERIAL OR MASS GRADING PRIOR TO THE PLACEMENT OF SPOILS AT THE SITE.

10. IF PORTIONS OF THE SITE WILL HAVE A TEMPORARY OR PERMANENT CEASE IN CONSTRUCTION ACTIVITY LASTING LONGER THAN 14 DAYS, SOIL STABILIZATION IN THOSE AREAS SHALL BE INITIATED AS SOON AS POSSIBLE PRIOR TO THE 14TH DAY OF INACTIVITY. IF ACTIVITY WILL RESUME PRIOR TO THE 21ST DAY, STABILIZATION MEASURES ARE NOT REQUIRED. IF DROUGHT CONDITIONS OR INCLEMENT WEATHER PREVENT ACTION BY THE 14TH DAY, STABILIZATION MEASURES SHALL BE INITIATED AS SOON AS POSSIBLE.

11. THE FOLLOWING RECORDS SHALL BE MAINTAINED AND MADE AVAILABLE TO THE TCEQ UPON REQUEST:
- THE DATES WHEN MAJOR GRADING ACTIVITIES OCCUR
- THE DATES WHEN CONSTRUCTION ACTIVITIES TEMPORARILY OR PERMANENTLY CEASE ON A PORTION OF THE SITE; AND
- THE DATES WHEN STABILIZATION MEASURES ARE INITIATED.

12. THE HOLDER OF ANY APPROVED EDWARD AQUIFER PROTECTION PLAN MUST NOTIFY THE APPROPRIATE REGIONAL OFFICE IN WRITING AND OBTAIN APPROVAL FROM THE EXECUTIVE DIRECTOR PRIOR TO INITIATING ANY OF THE FOLLOWING:

A. ANY PHYSICAL OR OPERATIONAL MODIFICATION OF ANY WATER POLLUTION ABATEMENT STRUCTURE(S), INCLUDING BUT NOT LIMITED TO PONDS, DAMS, BERMS, SEWAGE TREATMENT PLATS, AND DIVERSIONARY STRUCTURES;

B. ANY CHANGE IN NATURE OR CHARACTER OF THE REGULATED ACTIVITY FROM THAT WHICH WAS ORIGINALLY APPROVED OR A CHANGE IN WHICH WOULD SIGNIFICANTLY IMPACT THE ABILITY OF THE PLAN TO PREVENT POLLUTION OF THE EDWARDS AQUIFER;

C. ANY DEVELOPMENT OF LAND PREVIOUSLY IDENTIFIED AS UNDEVELOPED IN THE ORIGINAL WATER POLLUTION ABATEMENT PLAN.

AUSTIN REGIONAL OFFICE 2800 S. IH 35, SUITE 100 AUSTIN, TX 78704–5712 PHONE(512) 339–2929 FAX (512) 339–3795	SAN ANTONIO REGIONAL OFFICE 14250 JUDSON ROAD SAN ANTONIO, TEXAS 78233–4480 PHONE (210) 490–3096 FAX (210) 545–4329

TCEQ–0592 (REV. JULY 15, 2015)

HMT ENGINEERING & SURVEYING
290 S. CASTELL AVE., STE. 100
NEW BRAUNFELS, TX 78130
TBPE FIRM F-10961
TBPLS FIRM 1053600

THIS DOCUMENT IS RELEASED FOR THE PURPOSE OF INTERIM REVIEW UNDER THE AUTHORITY OF CHRISTOPHER P. VAN HEERDE P.E. # 93047 ON 6/3/20. IT IS NOT TO BE USED FOR CONSTRUCTION, BIDDING OR PERMIT PURPOSES.

Chris Van Heerde, P.E.

GENERAL NOTES (2 OF 2)

VILLAGE AT GRUENE CONDOMINIUMS

NO.	REVISION DESCRIPTION	REVISION DATE

DATE: JUNE 2020
DRAWN BY: LB
DESIGNED BY: HC
REVIEWED BY: SWH–CVH
HMT PROJECT NO.: 170.004

SHEET C0.3 PI

Drawing Name: N:_Projects\170 – James Japhet\170.004 – Villages at Gruene Garden Homes\CDs\City Permit\170.004_COVR.dwg User: robertb Jun 03, 2020 – 5:00pm

#201806043791

MINOR PLAT ESTABLISHING

VILLAGE AT GRUENE SUBDIVISION

BEING A 14.866 ACRE TRACT OF LAND SITUATED IN THE J.M. VERAMENDI SURVEY NO. 1, ABSTRACT NO. 2, COMAL COUNTY, TEXAS AND BEING ALL OF A CALLED 10 ACRE TRACT OF LAND (TRACT I), AND ALL OF A CALLED 10 ACRE TRACT (TRACT II), LESS AND EXCEPT A CALLED 2 ACRE TRACT (TRACT III), AND A CALLED 3.222 ACRE TRACT (TRACT IV), AS DESCRIBED IN GENERAL WARRANTY DEED RECORDED IN DOCUMENT NO. 201706002953 OF THE OFFICAL PUBLIC RECORDS OF COMAL COUNTY, TEXAS.

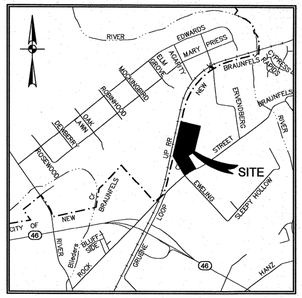

LOCATION MAP

SCALE: 1"=2,000'

NOTES:

1. THE SUBDIVISION WILL BE PROVIDED WATER, SEWER AND ELECTRIC BY NEW BRAUNFELS UTILITIES.
2. ALL BEARINGS AND COORDINATES SHOWN HEREON ARE IN GRID BASED ON THE TEXAS STATE PLANE COORDINATE SYSTEM, TEXAS SOUTH CENTRAL ZONE (4204), NORTH AMERICAN DATUM 1983. DISTANCES SHOWN HEREON ARE SURFACE USING COMBINED SCALE FACTOR OF 1.00015.
3. MONUMENTS WERE FOUND OR SET AT EACH CORNER OF THE SURVEY BOUNDARY OF THE SUBDIVISION. MONUMENTS AND MARKERS WILL BE SET WITH 1/2" IRON PIN WITH PLASTIC CAP STAMPED "DAM #5348 PROP. COR." IMMEDIATELY AFTER COMPLETION OF UTILITY INSTALLATION AND STREET CONSTRUCTION UNLESS NOTED OTHERWISE.
4. THE VILLAGE AT GRUENE SUBDIVISION FALLS INSIDE THE CITY LIMITS OF THE CITY OF NEW BRAUNFELS.
5. THE SUBDIVISION IS WITHIN THE NEW BRAUNFELS INDEPENDENT SCHOOL DISTRICT.
6. THE PROPERTY IS CURRENTLY ZONED R-2 WITH A SPECIAL USE PERMIT (ORDINANCE 2014-70)
7. A 6' WIDE SIDEWALK SHALL BE CONSTRUCTED BY THE OWNER/DEVELOPER ALONG GRUENE ROAD ONE-FOOT INSIDE THE STREET RIGHT-OF-WAY AT THE TIME OF BUILDING PERMIT.
8. NO STRUCTURES, WALLS OR OTHER OBSTRUCTIONS OF ANY KIND SHALL BE PLACED WITHIN THE LIMITS OF THE DRAINAGE EASEMENTS SHOWN ON THIS PLAT. NO LANDSCAPING, FENCES, OR OTHER TYPE OF MODIFICATIONS WHICH ALTER THE CROSS SECTIONS OF THE DRAINAGE EASEMENTS OR DECREASES THE HYDRAULIC CAPACITY OF THE EASEMENT, AS APPROVED, SHALL BE ALLOWED WITHOUT THE APPROVAL OF THE CITY ENGINEER. THE CITY OF NEW BRAUNFELS AND COMAL COUNTY SHALL HAVE THE RIGHT OF INGRESS AND EGRESS OVER GRANTORS ADJACENT PROPERTY TO REMOVE ANY OBSTRUCTIONS PLACED WITHIN THE LIMITS OF SAID DRAINAGE EASEMENTS AND TO MAKE ANY MODIFICATIONS OR IMPROVEMENTS WITHIN SAID DRAINAGE EASEMENTS.
9. THE ELEVATION OF THE LOWEST FLOOR SHALL BE AT LEAST 10 INCHES ABOVE THE FINISHED GRADE OF THE SURROUNDING GROUND, WHICH SHALL BE SLOPED IN A FASHION SO AS TO DIRECT STORMWATER AWAY FROM THE STRUCTURE. PROPERTIES ADJACENT TO STORMWATER CONVEYANCE STRUCTURES MUST HAVE A FLOOR SLAB ELEVATION OR BOTTOM OF FLOOR JOISTS A MINIMUM OF ONE FOOT ABOVE THE 100-YEAR WATER FLOW ELEVATION IN THE STRUCTURE. DRIVEWAYS SERVING HOUSES ON THE DOWNHILL SIDE OF THE STREET SHALL HAVE A PROPERLY SIZED CROSS SWALE PREVENTING RUNOFF FROM ENTERING THE GARAGE AND SHALL PREVENT WATER FROM LEAVING THE STREET.
10. FUTURE DEVELOPMENT IS SUBJECT TO CHAPTER 114 (STREETS, SIDEWALKS AND OTHER PUBLIC SPACES) OF THE NEW BRAUNFELS CODE OF ORDINANCES.
11. NO STRUCTURES IN THIS SUBDIVISION SHALL BE OCCUPIED UNTIL CONNECTED TO A PUBLIC WATER SYSTEM WHICH HAS BEEN APPROVED BY NEW BRAUNFELS UTILITIES, AND PUBLIC SEWER SYSTEM WHICH HAS BEEN APPROVED BY NEW BRAUNFELS UTILITIES.
12. THE VILLAGE AT GRUENE SUBDIVISION, ESTABLISHING A TOTAL OF 1 LOT WHERE DWELLING UNIT COUNT WILL NOT EXCEED 96 UNITS.
13. NO PORTION OF THE SUBDIVISION IS LOCATED WITHIN THE EXISTING SPECIAL FLOOD HAZARD ZONE A, 100-YEAR FLOOD BOUNDARY, AS DEFINED BY THE COMAL COUNTY, TEXAS COMMUNITY PANEL 48091C0455F, EFFECTIVE SEPTEMBER 2, 2009 AS PREPARED BY THE FEDERAL EMERGENCY MANAGEMENT AGENCY.
14. THIS SUBDIVISION IS SUBJECT TO THE 2006 CITY THIS SINGLE LOT PLAT IS APPROVED FOR MULTI-FAMILY USE TO CONSTRUCT A MAXIMUM OF 96 DETACHED DWELLING UNITS WHERE FEES ARE DUE PRIOR TO ISSUANCE OF ANY SITE DEVELOPMENT BUILDING PERMITS.
15. THIS SUBDIVISION LIES WITHIN THE EDWARDS AQUIFER RECHARGE ZONE. PROPERTY OWNEI'S ARE REQUIRED TO FOLLOW THE APPROVED W.P.A.P., REGULATED ENTIIY NO. 109268680, ADDITIONAL ID NO. 13000200 DATED 7/12/2016.
16. PERMANENT WATER QUALITY CONTROLS ARE REQUIRED FOR THIS SUBDIVISION PLAT IN ACCORDANCE WITH THE CITY OF NEW BRAUNFELS DRAINAGE AND EROSION CONTROL DESIGN MANUAL.

NEW BRAUNFELS UTILITIES NOTES:

1. MAINTENANCE OF DEDICATED UTILITY EASEMENTS IS THE RESPONSIBILITY OF THE PROPERTY OWNER. ANY USE OF AN EASEMENT, OR ANY PORTION OF IT, INCLUDING LANDSCAPING OR DRAINAGE FEATURES, IS SUBJECT TO AND SHALL NOT CONFLICT WITH THE TERMS AND CONDITIONS IN THE EASEMENT, MUST NOT ENDANGER OR INTERFERE WITH THE RIGHTS GRANTED BY THE EASEMENT TO NEW BRAUNFELS UTILITIES, ITS SUCCESSORS AND ASSIGNS, AND SHALL BE SUBJECT TO APPLICABLE PERMIT REQUIREMENTS OF THE CITY OF NEW BRAUNFELS OR ANY OTHER GOVERNING BODY. THE PROPERTY OWNER MUST OBTAIN, IN ADVANCE, WRITTEN AGREEMENT WITH THE UTILITIES TO UTILIZE THE EASEMENT, OR ANY PART OF IT.
2. UTILITIES WILL POSSESS A 5' WIDE SERVICE EASEMENT TO THE DWELLING ALONG THE SERVICE LINE TO THE SERVICE ENTRANCE. THIS EASEMENT WILL VARY DEPENDING UPON LOCATION OF DWELLING AND SERVICE.
3. UTILITIES SHALL HAVE ACCESS TO THE METER LOCATIONS FROM THE FRONT YARD AND METER LOCATIONS SHALL NOT BE LOCATED WITHIN A FENCED AREA.
4. EACH LOT MUST HAVE ITS OWN WATER AND SEWER SERVICE AT THE OWNER'S/DEVELOPER'S EXPENSE.
5. DO NOT COMBINE ANY NEW UTILITY EASEMENTS (U.E.) WITH DRAINAGE EASEMENTS (D.E.) OR MAKE CHANGES IN GRADE WITHIN THE UTILITY EASEMENTS (U.E.) WITH OUT WRITTEN APPROVAL FROM NEW BRAUNFELS UTILITIES.

STATE OF TEXAS
COUNTY OF COMAL

I, THE UNDERSIGNED OWNER OF THE LAND SHOWN ON THIS PLAT, AND DESIGNATED HEREIN AS VILLAGE AT GRUENE SUBDIVISION , TO THE CITY OF NEW BRAUNFELS, COUNTY OF COMAL, TEXAS, AND WHOSE NAME IS SUBSCRIBED HERETO, DO HEREBY SUBDIVIDE SUCH PROPERTY AND DEDICATE TO THE USE OF THE PUBLIC ALL STREETS, DRAINS, EASEMENTS, AND PUBLIC PLACES THEREON SHOWN FOR THE PURPOSES AND CONSIDERATION THEREIN EXPRESSED.

OWNER:
DIRECT ASSETS, LLC
C/O DARREN GERLOFF
14955 BULVERDE RD
SAN ANTONIO, TX 78247

STATE OF TEXAS
COUNTY OF COMAL

THIS INSTRUMENT WAS ACKNOWLEDGED BEFORE ME ON THIS 26 DAY OF September 2018,

BY Darren Gerloff

NOTARY PUBLIC, STATE OF TEXAS
MY COMMISSION EXPIRES: 01-04-2021

JENNIFER A.-HARRISON
Notary Public, State of Texas
Comm. Expires 01-04-2021
Notary ID 130949303

KNOW ALL MEN BY THESE PRESENTS:

I, THE UNDERSIGNED, DREW A. MAWYER, A REGISTERED PROFESSIONAL LAND SURVEYOR IN THE STATE OF TEXAS, HEREBY CERTIFY THAT THIS PLAT IS TRUE AND CORRECTLY MADE UNDER MY SUPERVISION AND IN COMPLIANCE WITH CITY AND STATE SURVEY REGULATIONS AND LAWS AND MADE ON THE GROUND AND THAT THE CORNER MONUMENTS WERE PROPERLY PLACED UNDER MY SUPERVISION.

DREW A. MAWYER
REGISTERED PROFESSIONAL LAND SURVEYOR NO. 5348
D.A. MAWYER LAND SURVEYING
5151 W. SH46
NEW BRAUNFELS, TEXAS 78132
FIRM #10191500

STATE OF TEXAS
REGISTERED
DREW A. MAWYER
5348
PROFESSIONAL
LAND SURVEYOR

MOELLER & ASSOCIATES
Engineering Solutions
2021 SH 46W, Ste. 105
New Braunfels, TX 78132
ph: (830) 358-7127
www.ma-tx.com TBPE FIRM F-13351

LEGEND:
P.O.B. = POINT OF BEGINNING
U.L. = UTILITY EASEMENT
R.O.W. = RIGHT-OF-WAY
○ = 1/2" IRON PIN SET
● = IRON PIN FOUND

APPROVED THIS THE 13th DAY OF September 2018, BY THE CITY OF NEW BRAUNFELS, TEXAS.

PLANNING DIRECTOR

APPROVED FOR ACCEPTANCE

11/1/2018 DATE CITY ENGINEER

10/31/18 DATE NEW BRAUNFELS UTILITIES

FOR COMAL COUNTY

I, Bobbie Koepp DO HEREBY CERTIFY THAT THE FOREGOING INSTRUMENT WAS FILED FOR RECORD IN THE MAP AND PLAT RECORDS, DOCUMENT NO. 201806043791 OF COMAL COUNTY THE 9 DAY OF November 20 18 AT 10:46 A.M. WITNESS MY HAND AND OFFICIAL SEAL, THIS THE 9 DAY OF November, A.D. 20 18.

COUNTY CLERK, COMAL COUNTY, TEXAS

DEPUTY

COUNTY COURT OF COMAL COUNTY, TEXAS

PREPARED: September 26, 2018

PAGE 1 OF 2

Drawing Name: N:_Projects\170 - James Jophet\170.004 - Villages at Gruene Garden Homes\Cds\City Permit\170.004_PLAT.dwg User: robertb Jun 03, 2020 - 5:00pm

Drawing Name: N:\Projects\GERL001 Village at Gruene\Planning\Plotting\Preliminary Plat Gruene 15 Acre Tract.dwg User: jamesingalls Sep 26, 2018 - 8:24am

Generated on 08/02/2019 at 09:29 F & F Microfilming, Inc. - © 2019 viewPlat v12.07

FOR REFERENCE ONLY

HMT ENGINEERING & SURVEYING
290 S. CASTELL AVE., STE. 100
NEW BRAUNFELS, TX 78130
TBPE FIRM F-10961
TBPLS FIRM 10053600

THIS DOCUMENT IS RELEASED FOR THE PURPOSE OF INTERIM REVIEW UNDER THE AUTHORITY OF CHRISTOPHER P. VAN HEERDE P.E. # 93047 ON 6/3/20. IT IS NOT TO BE USED FOR CONSTRUCTION, BIDDING OR PERMIT PURPOSES.

SUBDIVISION PLAN PLAT (1 OF 2)

VILLAGE AT GRUENE CONDOMINIUMS

NO.	REVISION DESCRIPTION	REVISION DATE

DATE: APRIL 2020
DRAWN BY: LB
DESIGNED BY: HC
REVIEWED BY: SWH-CVH
HMT PROJECT NO.: 170.004

SHEET
C0.4 PI

Village at Gruene
Comal County, Texas, File #: 201806043791

#201806043791

MINOR PLAT ESTABLISHING

VILLAGE AT GRUENE SUBDIVISION

BEING 14.866 ACRE TRACT OF LAND SITUATED IN THE J.M. VERAMENDI SURVEY NO. 1, ABSTRACT NO. 2, COMAL COUNTY, TEXAS, AND BEING ALL OF A CALLED 10 ACRE TRACT OF LAND (TRACT I), AND ALL OF A CALLED 10 ACRE TRACT (TRACT II), LESS AND EXCEPT A CALLED 2 ACRE TRACT (TRACT III), AND A CALLED 3.222 ACRE TRACT (TRACT IV), AS DESCRIBED IN GENERAL WARRANT DEED RECORDED IN DOCUMENT NO. 201706002953 OF THE OFFICIAL PUBLIC RECORDS, COMAL COUNTY, TEXAS.

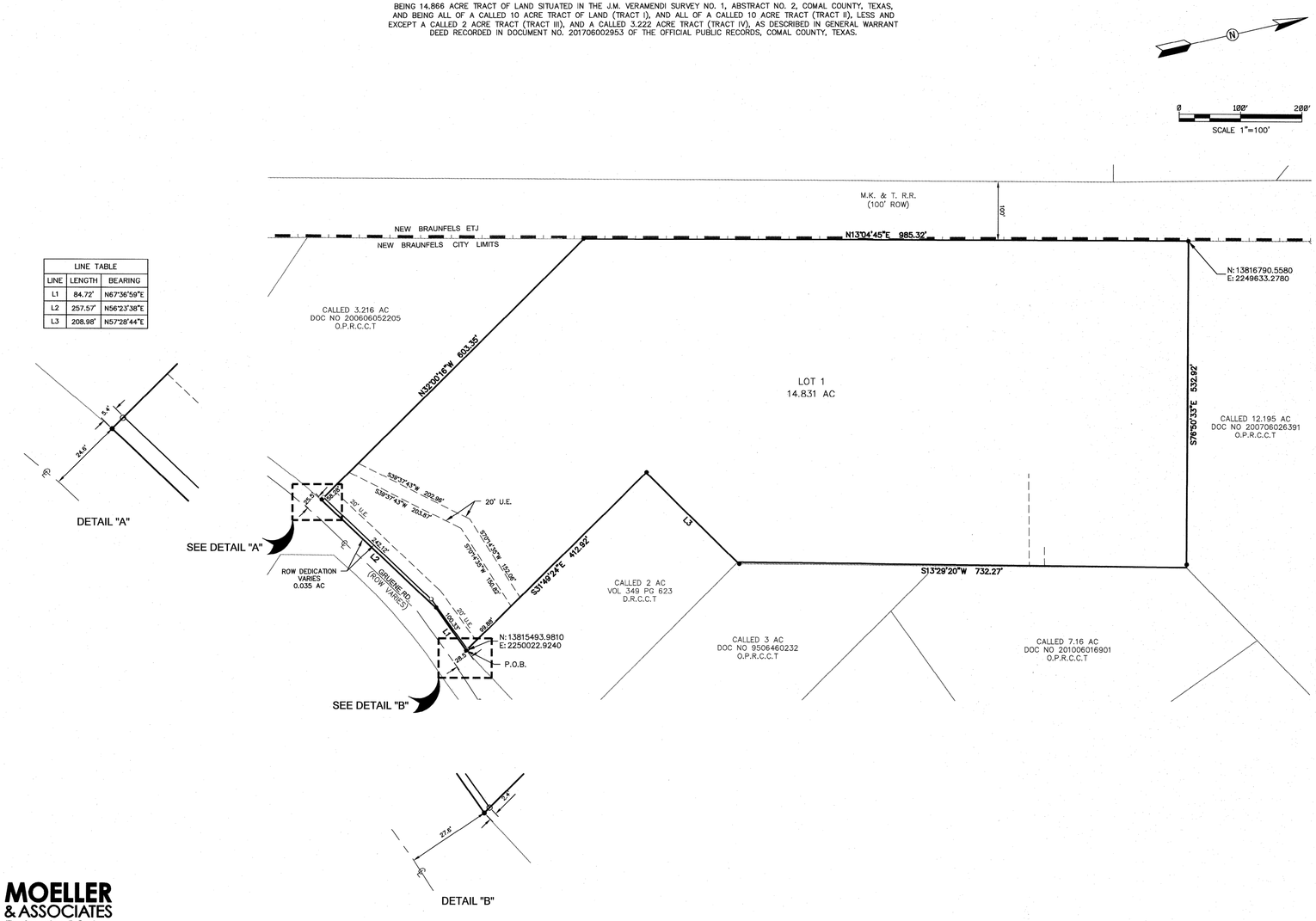

LINE TABLE		
LINE	LENGTH	BEARING
L1	84.72'	N67°36'59"E
L2	257.57'	N56°23'38"E
L3	208.98'	N57°28'44"E

MOELLER & ASSOCIATES
Engineering Solutions
2021 SH 46W, Ste. 105
New Braunfels, TX 78132
ph: (830) 358-7127
www.ma-tx.com TBPE FIRM F-13351

LEGEND:
P.O.B. = POINT OF BEGINNING
U.E. = UTILITY EASEMENT
R.O.W. = RIGHT-OF-WAY
○ = 1/2" IRON PIN SET
● = IRON PIN FOUND

PREPARED: October 30, 2018

PAGE 2 OF 2

Drawing Name: N:_Projects\170 - James Jophet\170.004 - Villages at Gruene Garden Homes\02a\City Permit\170.004_PLAT.dwg User: robertb Jun 03, 2020 - 5:00pm

Drawing Name: N:\Projects\VERL001 Village at Gruene\Planning\Platting\Preliminary Plat Gruene 15 Acre Tract.dwg User: jamesbjgalls Oct 30, 2018 - 9:16am

Generated on 08/02/2019 at 09:30 F & F Microfilming, Inc. - © 2019 viewPlat v12.07

FOR REFERENCE ONLY

HMT ENGINEERING & SURVEYING
290 S. CASTELL AVE., STE. 100
NEW BRAUNFELS, TX 78130
TBPE FIRM F-10961
TBPLS FIRM 1053600

THIS DOCUMENT IS RELEASED FOR THE PURPOSE OF INTERIM REVIEW UNDER THE AUTHORITY OF CHRISTOPHER P. VAN HEERDE P.E. # 93047 ON 6/3/20. IT IS NOT TO BE USED FOR CONSTRUCTION, BIDDING OR PERMIT PURPOSES.

SUBDIVISION PLAT (2 OF 2)

VILLAGE AT GRUENE CONDOMINIUMS

NO.	REVISION DESCRIPTION	REVISION DATE

DATE: APRIL 2020
DRAWN BY: LB
DESIGNED BY: HC
REVIEWED BY: SWH–CVH
HMT PROJECT NO.: 170.004

SHEET
C0.5 PI

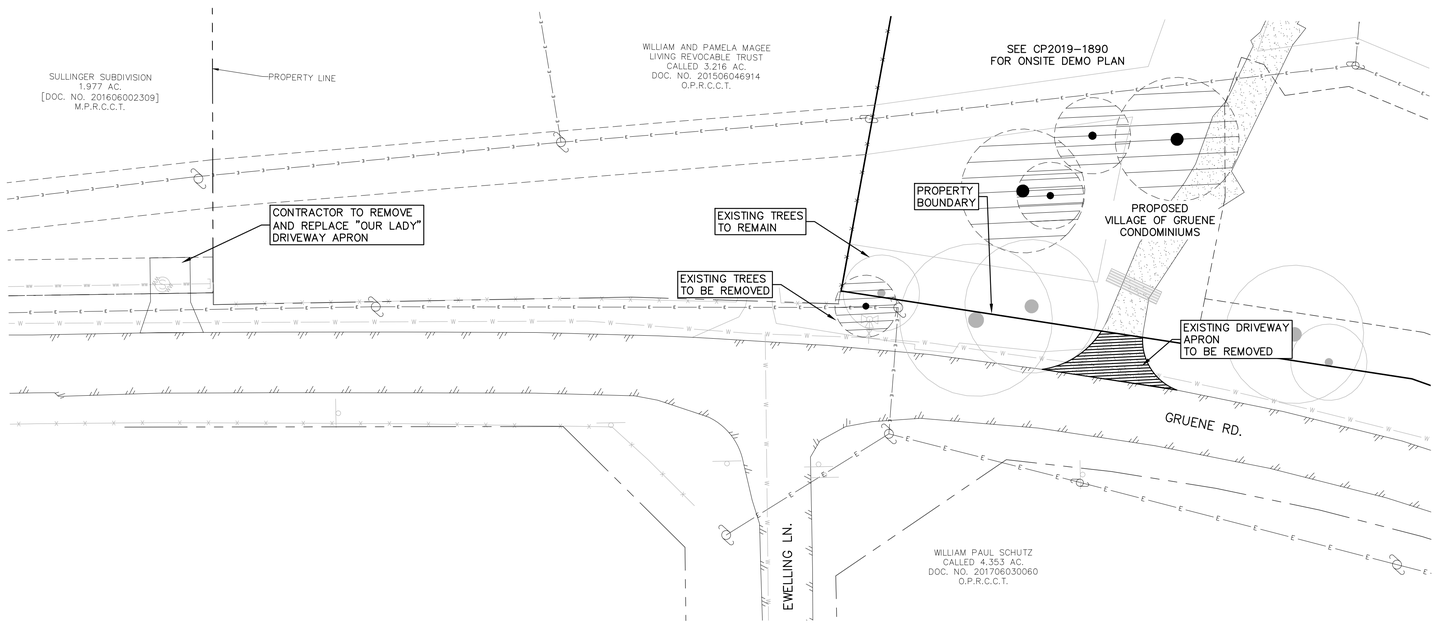

0 15 30
SCALE: 1" = 30'

LEGEND

EXISTING TREES TO BE REMOVED

EXISTING TREES TO REMAIN

NOTE:
PROPOSED IMPROVEMENTS ARE SHOWN FOR FRAME OF REFERENCE PURPOSES ONLY.

THE LOCATION OF ALL EXISTING UNDERGROUND UTILITIES ARE SHOWN IN APPROXIMATE LOCATIONS ONLY. THE CONTRACTOR SHALL DETERMINE THE EXACT LOCATION OF ALL EXISTING UTILITIES BEFORE COMMENCING WORK. THE CONTRACTOR WILL AGREE TO BE FULLY RESPONSIBLE FOR ANY AND ALL DAMAGES WHICH MIGHT BE INCURRED BY THEIR FAILURE TO EXACTLY LOCATE AND PRESERVE ANY AND ALL UNDERGROUND UTILITIES, STRUCTURES OR FACILITIES. CONTRACTOR SHALL NOTIFY ENGINEER OF ANY DISCREPANCIES 24-HOURS PRIOR TO COMMENCING CONSTRUCTION.

HMT
ENGINEERING & SURVEYING
290 S. CASTELL AVE., STE. 100
NEW BRAUNFELS, TX 78130
TBPE FIRM F-10961
TBPLS FIRM 10053600

THIS DOCUMENT IS RELEASED FOR THE PURPOSE OF INTERIM REVIEW UNDER THE AUTHORITY OF CHRISTOPHER P. VAN HEERDE P.E. # 93047 ON 6/3/20. IT IS NOT TO BE USED FOR CONSTRUCTION, BIDDING OR PERMIT PURPOSES.

DEMOLITION PLAN

VILLAGE AT GRUENE
CONDOMINIUMS

NO.	REVISION DESCRIPTION	REVISION DATE

DATE: APRIL 2020
DRAWN BY: LB
DESIGNED BY: HC
REVIEWED BY: SWH-CVH
HMT PROJECT NO.: 170.004

SHEET
C1.1 PI

Drawing Name: N:_Projects\170 - James Japhet\170.004 - Villages at Gruene Garden Homes\CDs\City Permit\170.004_DEMO.dwg User: robertb Jun 03, 2020 - 5:01pm

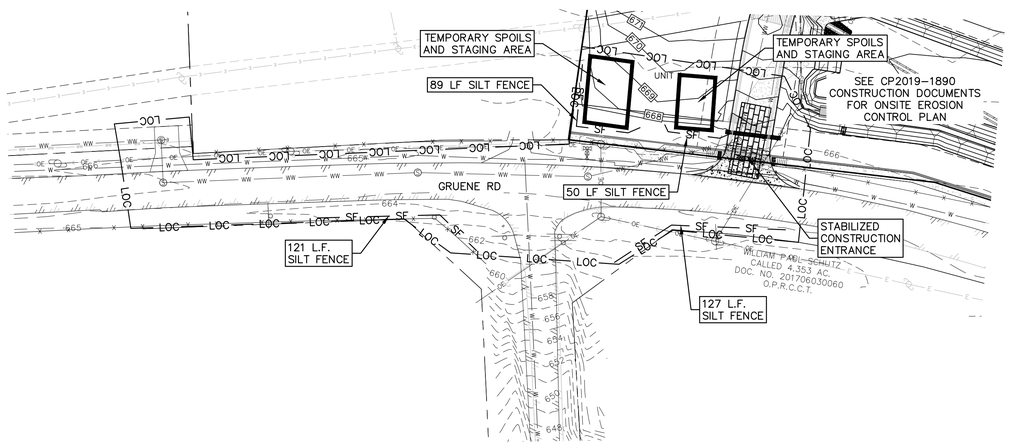

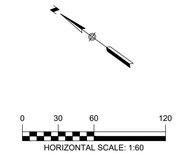

LEGEND

700	EXISTING CONTOURS
700	PROPOSED CONTOURS
B.L.	BUILDING SETBACK LINE
U.E.	UTILITY EASEMENT
D.E.	DRAINAGE EASEMENT
	DRAINAGE FLOW DIRECTION
SF	SILT FENCE
LOC	LIMIT OF CONSTRUCTION
	STABILIZED CONSTRUCTION ENTRANCE
	EROSION CONTROL LOG INLET PROTECTION
	ROCK BERM

NOTE:

CONTRACTOR SHALL BE RESPONSIBLE FOR ALL DISTURBED AREAS ON WHICH CONSTRUCTION ACTIVITIES HAVE CEASED (TEMPORARILY OR PERMANENT) AND SHALL BE STABILIZED WITHIN 14 DAYS UNLESS ACTIVITY RESUMES IN 21 DAYS, PER TPDES REQUIREMENTS. SEEDING DOES NOT CONSTITUTE AS STABILIZATION.

SEQUENCE OF CONSTRUCTION

1. INSTALL EROSION CONTROLS PER APPROVED PLAN.
2. TEMPORARY CONTROLS TO BE INSPECTED AND MAINTAINED WEEKLY AND PRIOR TO ANTICIPATED RAINFALL EVENTS, AND AFTER RAINFALL EVENTS, AS NEEDED. CONTRACTOR/OWNER SHALL PROVIDE A CONTACT NAME AND NUMBER FOR EROSION CONTROL ISSUES.
3. CONDUCT DEMOLITION ACTIVITIES, IF APPLICABLE.
4. CONSTRUCT DRAINAGE IMPROVEMENTS, IF APPLICABLE.
5. CONSTRUCT CURB INLET PROTECTION AT THE TIME OF CURB INLET INSTALLATION.
6. CONSTRUCT DEVELOPMENT PER APPROVED PLANS.
7. INSTALL STREETSCAPE AND/OR LANDSCAPING IMPROVEMENTS.
8. CONTRACTOR TO VEGETATE ANY DISTURBED AREAS ONCE FINAL GRADING IS COMPLETE, AND ESTABLISH A MIN OF 80% VEGETATION PRIOR TO COMPLETION. PER TPDES REQUIREMENTS, DISTURBED AREAS ON WHICH CONSTRUCTION ACTIVITIES HAVE CEASED (TEMPORARILY OR PERMANENTLY) SHALL BE STABILIZED WITHIN 14 DAYS UNLESS ACTIVITY RESUMES WITHIN 21 DAYS. SEEDING DOES NOT CONSTITUTE AS STABILIZATION.
9. REMOVE ALL TEMPORARY EROSION CONTROL MEASURES.
10. TPDES REQUIREMENTS – DISTURBED AREAS ON WHICH CONSTRUCTION ACTIVITIES HAVE CEASED (TEMPORARY OR PERMANENTLY) SHALL BE STABILIZED WITHIN 14 DAYS UNLESS ACTIVITY WILL BEGIN AGAIN WITHIN 21 DAYS

THE LOCATION OF ALL EXISTING UNDERGROUND UTILITIES ARE SHOWN IN APPROXIMATE LOCATIONS ONLY. THE CONTRACTOR SHALL DETERMINE THE EXACT LOCATION OF ALL EXISTING UTILITIES BEFORE COMMENCING WORK. THE CONTRACTOR WILL AGREE TO BE FULLY RESPONSIBLE FOR ANY AND ALL DAMAGES WHICH MIGHT BE INCURRED BY THEIR FAILURE TO EXACTLY LOCATE AND PRESERVE ANY AND ALL UNDERGROUND UTILITIES, STRUCTURES OR FACILITIES. CONTRACTOR SHALL NOTIFY ENGINEER OF ANY DISCREPANCIES 24-HOURS PRIOR TO COMMENCING CONSTRUCTION.

290 S. CASTELL AVE., STE. 100
NEW BRAUNFELS, TX 78130
TBPE FIRM F-10961
TBPLS FIRM 10053600

HMT ENGINEERING & SURVEYING

STATE OF TEXAS
CHRISTOPHER P. VAN HEERDE
93047
LICENSED
PROFESSIONAL ENGINEER

06/03/2020

EROSION CONTROL PLAN

VILLAGE AT GRUENE CONDOMINIUMS

NO.	REVISION DESCRIPTION	REVISION DATE

DATE: JUNE 2020
DRAWN BY: LB
DESIGNED BY: HC
REVIEWED BY: SWH–CVH
HMT PROJECT NO.: 170.004

SHEET
C3.1 PI

Drawing Name: N:_Projects\170 - James Jophet\170.004 - Villages at Gruene Garden Homes\CD's\170.004-EROS.dwg User: robertb Jun 03, 2020 - 5:01pm

SILT FENCE

MATERIALS:

1. SILT FENCE MATERIAL SHOULD BE POLYPROPYLENE, POLYETHYLENE OR POLYAMIDE WOVEN OR NONWOVEN FABRIC. THE FABRIC WIDTH SHOULD BE 36 INCHES, WITH A MINIMUM UNIT WEIGHT OF 4.5 OZ/YD, MULLEN BURST STRENGTH EXCEEDING 190 LB/IN2, ULTRAVIOLET STABILITY EXCEEDING 70%, AND MINIMUM APPARENT OPENING SIZE OF U.S. SIEVE NO. 30.
2. FENCE POSTS SHOULD BE MADE OF HOT ROLLED STEEL, AT LEAST 4 FEET LONG WITH TEE OR YBAR CROSS SECTION, SURFACE PAINTED OR GALVANIZED, MINIMUM NOMINAL WEIGHT 1.25 LB/FT2, AND BRINDELL HARDNESS EXCEEDING 140.
3. WOVEN WIRE BACKING TO SUPPORT THE FABRIC SHOULD BE GALVANIZED 2" X 4" WELDED WIRE, 12 GAUGE MINIMUM.

INSTALLATION:

1. STEEL POSTS, WHICH SUPPORT THE SILT FENCE, SHOULD BE INSTALLED ON A SLIGHT ANGLE TOWARD THE ANTICIPATED RUNOFF SOURCE. POST MUST BE EMBEDDED A MINIMUM OF 1– FOOT DEEP AND SPACED NOT MORE THAN 8 FEET ON CENTER. WHERE WATER CONCENTRATES, THE MAXIMUM SPACING SHOULD BE 6 FEET.
2. LAY OUT FENCING DOWN–SLOPE OF DISTURBED AREA, FOLLOWING THE CONTOUR AS CLOSELY AS POSSIBLE. THE FENCE SHOULD BE SITED SO THAT THE MAXIMUM DRAINAGE AREA IS ¼ ACRE/100 FEET OF FENCE.
3. THE TOE OF THE SILT FENCE SHOULD BE TRENCHED IN WITH A SPADE OR MECHANICAL TRENCHER, SO THAT THE DOWN–SLOPE FACE OF THE TRENCH IS FLAT AND PERPENDICULAR TO THE LINE OF FLOW. WHERE FENCE CANNOT BE TRENCHED IN (E.G., PAVEMENT OR ROCK OUTCROP), WEIGHT FABRIC FLAP WITH 3 INCHES OF PEA GRAVEL ON UPHILL SIDE TO PREVENT FLOW FROM SEEPING UNDER FENCE.
4. THE TRENCH MUST BE A MINIMUM OF 6 INCHES DEEP AND 6 INCHES WIDE TO ALLOW FOR THE SILT FENCE FABRIC TO BE LAID IN THE GROUND AND BACKFILLED WITH COMPACTED MATERIAL.
5. SILT FENCE SHOULD BE SECURELY FASTENED TO EACH STEEL SUPPORT POST OR TO WOVEN WIRE, WHICH IS IN TURN ATTACHED TO THE STEEL FENCE POST. THERE SHOULD BE A 3–FOOT OVERLAP, SECURELY FASTENED WHERE ENDS OF FABRIC MEET.
6. SILT FENCE SHOULD BE REMOVED WHEN THE SITE IS COMPLETELY STABILIZED SO AS NOT TO BLOCK OR IMPEDE STORM FLOW OR DRAINAGE.

INSPECTION AND MAINTENANCE GUIDELINES:

1. INSPECT ALL FENCING WEEKLY, AND AFTER ANY RAINFALL.
2. REMOVE SEDIMENT WHEN BUILDUP REACHES 6 INCHES.
3. REPLACE ANY TORN FABRIC OR INSTALL A SECOND LINE OF FENCING PARALLEL TO THE TORN SECTION.
4. REPLACE OR REPAIR ANY SECTIONS CRUSHED OR COLLAPSED IN THE COURSE OF CONSTRUCTION ACTIVITY. IF A SECTION OF FENCE IS OBSTRUCTING VEHICULAR ACCESS, CONSIDER RELOCATING IT TO A SPOT WHERE IT WILL PROVIDE EQUAL PROTECTION, BUT WILL NOT OBSTRUCT VEHICLES. A TRIANGULAR FILTER DIKE MAY BE PREFERABLE TO A SILT FENCE AT COMMON VEHICLE ACCESS POINTS.
5. WHEN CONSTRUCTION IS COMPLETE, THE SEDIMENT SHOULD BE DISPOSED OF IN A MANNER THAT WILL NOT CAUSE ADDITIONAL SILTATION AND THE PRIOR LOCATION OF THE SILT FENCE SHOULD BE REVEGETATED. THE FENCE ITSELF SHOULD BE DISPOSED OF IN AN APPROVED LANDFILL.

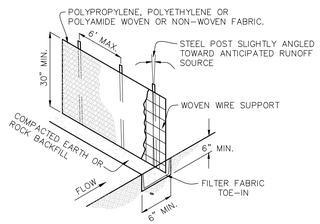

PERSPECTIVE VIEW

SILT FENCE DETAIL
NOT TO SCALE

CONCRETE WASHOUT AREAS

THE PURPOSE OF CONCRETE WASHOUT AREAS IS TO PREVENT OR REDUCE THE DISCHARGE OF POLLUTANTS TO STORMWATER FROM CONCRETE WASTE BY CONDUCTING WASHOUT OFFSITE, PERFORMING ONSITE WASHOUT IN A DESIGNATED AREA, AND TRAINING EMPLOYEES AND SUBCONTRACTORS.

THE FOLLOWING STEPS WILL HELP REDUCE STORMWATER POLLUTION FROM CONCRETE WASTES:

- INCORPORATE REQUIREMENTS FOR CONCRETE WASTE MANAGEMENT INTO MATERIAL SUPPLIER AND SUBCONTRACTOR AGREEMENTS.
- AVOID MIXING EXCESS AMOUNTS OF FRESH CONCRETE.
- PERFORM WASHOUT OF CONCRETE TRUCKS IN DESIGNATED AREAS ONLY.
- DO NOT WASH OUT CONCRETE TRUCKS INTO STORM DRAINS, OPEN DITCHES, STREETS, OR STREAMS.
- DO NOT ALLOW EXCESS CONCRETE TO BE DUMPED ONSITE, EXCEPT IN DESIGNATED AREAS.

FOR ONSITE WASHOUT:

- LOCATE WASHOUT AREA AT LEAST 50 FEET FROM SENSITIVE FEATURES, STORM DRAINS, OPEN DITCHES, OR WATER BODIES. DO NOT ALLOW RUNOFF FROM THIS AREA BY CONSTRUCTING A TEMPORARY PIT OR BERMED AREA LARGE ENOUGH FOR LIQUID AND SOLID WASTE.
- WASH OUT WASTES INTO THE TEMPORARY PIT WHERE THE CONCRETE CAN SET, BE BROKEN UP, AND THEN DISPOSED PROPERLY.

BELOW GRADE CONCRETE WASHOUT FACILITIES ARE TYPICAL. THESE CONSIST OF A LINED EXCAVATION SUFFICIENTLY LARGE TO HOLD EXPECTED VOLUME OF WASHOUT MATERIAL. ABOVE GRADE FACILITIES ARE USED IF EXCAVATION IS NOT PRACTICAL. TEMPORARY CONCRETE WASHOUT FACILITY (TYPE ABOVE GRADE) SHOULD BE CONSTRUCTED AS SHOWN ON THE DETAILS AT THE END OF THIS SECTION, WITH SUFFICIENT QUANTITY AND VOLUME TO CONTAIN ALL LIQUID AND CONCRETE WASTE GENERATED BY WASHOUT OPERATIONS. PLASTIC LINING MATERIAL SHOULD BE A MINIMUM OF 10 MIL IN POLYETHYLENE SHEETING AND SHOULD BE FREE OF HOLES, TEARS, OR OTHER DEFECTS THAT COMPROMISE THE IMPERMEABILITY OF THE MATERIAL.

WHEN TEMPORARY CONCRETE WASHOUT FACILITIES ARE NO LONGER REQUIRED FOR THE WORK, THE HARDENED CONCRETE SHOULD BE REMOVED AND DISPOSED OF. MATERIALS USED TO CONSTRUCT TEMPORARY CONCRETE WASHOUT FACILITIES SHOULD BE REMOVED FROM THE SITE OF THE WORK AND DISPOSED OF HOLES, DEPRESSIONS OR OTHER GROUND DISTURBANCE CAUSED BY THE REMOVAL OF THE TEMPORARY CONCRETE WASHOUT FACILITIES SHOULD BE BACKFILLED AND REPAIRED.

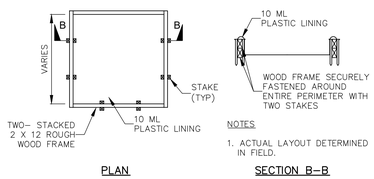

PLAN

SECTION B–B

NOTES

1. ACTUAL LAYOUT DETERMINED IN FIELD.

CONCRETE WASHOUT PIT DETAIL
TYPE "ABOVE GRADE"
NOT TO SCALE

ROCK BERM

1. USE ONLY OPEN GRADED ROCK 3–5" DIAMETER.
2. THE ROCK BERM SHALL BE SECURED WITH A WOVEN WIRE SHEATHING HAVING MAXIMUM 1" OPENINGS AND MINIMUM WIRE DIAMETER OF 20 GAUGE.
3. THE ROCK BERM SHALL BE INSPECTED WEEKLY OR AFTER EACH RAIN, AND THE STONE AND/OR FABRIC CORE–WOVEN WIRE SHEATHING SHALL BE REPLACED WHEN THE STRUCTURE CEASES TO FUNCTION AS INTENDED, DUE TO SILT ACCUMULATION AMONG THE ROCKS, WASHOUT CONSTRUCTION TRAFFIC DAMAGE, ETC.
4. WHEN SILT REACHES A DEPTH EQUAL TO 6", THE SILT WILL BE REMOVED AND DISPOSED OF IN AN APPROVED SITE AND IN SUCH A MANNER AS TO NOT CREATE A SILTATION PROBLEM.
5. DAILY INSPECTION SHALL BE MADE ON SEVERE SERVICE ROCK BERMS
6. WHEN THE SITE IS COMPLETELY STABILIZED, THE BERM AND ACCUMULATED SILT SHALL BE REMOVED AND DISPOSED OF IN AN APPROVED MANNER.

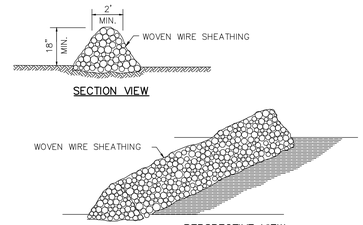

SECTION VIEW

PERSPECTIVE VIEW

ROCK BERM DETAIL
NOT TO SCALE

STABILIZED CONSTRUCTION ENTRANCE / EXIT

MATERIALS:

1. THE AGGREGATE SHOULD CONSIST OF 3 TO 5 INCH WASHED STONE OVER A STABLE FOUNDATION AS SPECIFIED IN THE PLAN.
2. THE AGGREGATE SHOULD BE PLACED WITH A MINIMUM THICKNESS OF 8 INCHES.
3. THE GEOTEXTILE FABRIC SHOULD BE DESIGNED SPECIFICALLY FOR USE AS A SOIL FILTRATION MEDIA WITH AN APPROXIMATE WEIGHT OF 6 OZ/YD2, A MULLEN BURST RATING OF 140 LB/IN2, AND AN EQUIVALENT OPENING SIZE GREATER THAN A NUMBER 50 SIEVE.
4. IF A WASHING FACILITY IS REQUIRED, A LEVEL AREA WITH A MINIMUM OF 4 INCH DIAMETER WASHED STONE OR COMMERCIAL RACK SHOULD BE INCLUDED IN THE PLANS. DIVERT WASTEWATER TO A SEDIMENT TRAP OR BASIN.

INSTALLATION:

1. AVOID CURVES ON PUBLIC ROADS AND STEEP SLOPES. REMOVE VEGETATION AND OTHER OBJECTIONABLE MATERIAL FROM THE FOUNDATION AREA. GRADE CROWN FOUNDATION FOR POSITIVE DRAINAGE.
2. THE MINIMUM WIDTH OF THE ENTRANCE/EXIT SHOULD BE 12 FEET OR THE FULL WIDTH OF EXIT ROADWAY, WHICHEVER IS GREATER.
3. THE CONSTRUCTION ENTRANCE SHOULD BE AT LEAST 50 FEET LONG.
4. IF THE SLOPE TOWARD THE ROAD EXCEEDS 2%, CONSTRUCT A RIDGE, 6 TO 8 INCHES HIGH WITH 3:1 (H:V) SIDE SLOPES, ACROSS THE FOUNDATION APPROXIMATELY 15 FEET FROM THE ENTRANCE TO DIVERT RUNOFF AWAY FROM THE PUBLIC ROAD.
5. PLACE GEOTEXTILE FABRIC AND GRADE FOUNDATION TO IMPROVE STABILITY, ESPECIALLY WHERE WET CONDITIONS ARE ANTICIPATED.
6. PLACE STONE TO DIMENSIONS AND GRADE SHOWN ON PLANS. LEAVE SURFACE SMOOTH AND SLOPE FOR DRAINAGE.
7. DIVERT ALL SURFACE RUNOFF AND DRAINAGE FROM THE STONE PAD TO A SEDIMENT TRAP OR BASIN.
8. INSTALL PIPE UNDER PAD AS NEEDED TO MAINTAIN PROPER PUBLIC ROAD DRAINAGE.

INSPECTION AND MAINTENANCE GUIDELINES:

1. THE ENTRANCE SHOULD BE MAINTAINED IN A CONDITION, WHICH WILL PREVENT TRACKING OR LOWING OF SEDIMENT ONTO PUBLIC RIGHTS–OF–WAY. THIS MAY REQUIRE PERIODIC TOP DRESSING WITH ADDITIONAL STONE AS CONDITIONS DEMAND AND REPAIR AND/OR CLEANOUT OF ANY MEASURES USED TO TRAP SEDIMENT.
2. ALL SEDIMENT SPILLED, DROPPED, WASHED OR TRACKED ONTO PUBLIC RIGHTS–OF–WAY SHOULD BE REMOVED IMMEDIATELY BY CONTRACTOR.
3. WHEN NECESSARY, WHEELS SHOULD BE CLEANED TO REMOVE SEDIMENT PRIOR TO ENTRANCE ONTO PUBLIC RIGHT–OF–WAY.
4. WHEN WASHING IS REQUIRED, IT SHOULD BE DONE ON AN AREA STABILIZED WITH CRUSHED STONE THAT DRAINS INTO AN APPROVED SEDIMENT TRAP OR SEDIMENT BASIN.
5. ALL SEDIMENT SHOULD BE PREVENTED FROM ENTERING ANY STORM DRAIN, DITCH OR WATER COURSE BY USING APPROVED METHODS.

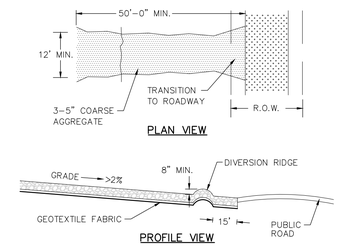

CONSTRUCTION ENTRANCE DETAIL
NOT TO SCALE

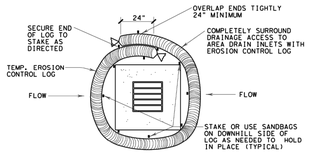

EROSION CONTROL LOG AT DROP INLET

CL-DI

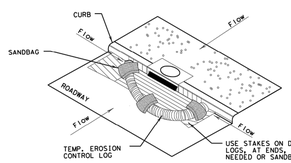

EROSION CONTROL LOG AT CURB INLET

CL-CI

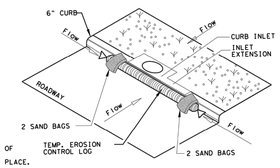

EROSION CONTROL LOG AT CURB INLET

CL-CI

NOTE:
EROSION CONTROL LOGS USED AT CURB INLETS SHOULD ONLY BE USED IF THEY WILL NOT IMPEDE TRAFFIC OR FLOOD THE ROADWAY OR WHEN THE STORM SEWER SYSTEM IS NOT FULLY FUNCTIONAL.

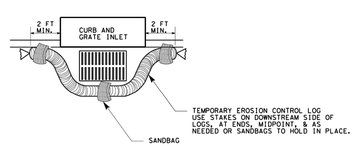

EROSION CONTROL LOG AT CURB & GRADE INLET

CL-GI

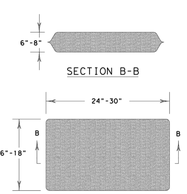

SECTION B–B

SANDBAG DETAIL

SHEET 3 OF 3

Texas Department of Transportation — Design Division Standard

TEMPORARY EROSION, SEDIMENT AND WATER POLLUTION CONTROL MEASURES

EROSION CONTROL LOG

EC(9)-16

FILE: ec916	DN: TxDOT	CK: KM	DW: LS/PT	CK: LS
© TxDOT: JULY 2016	CONT	SECT	JOB	HIGHWAY
REVISIONS				
	DIST		COUNTY	SHEET NO.

DISCLAIMER:
The use of this standard is governed by the "Texas Engineering Practice Act". No warranty of any kind is made by TxDOT for any purpose whatsoever. TxDOT assumes no responsibility for the conversion of this standard to other formats or for incorrect results or damages resulting from its use.

DATE:
FILE:

THE LOCATION OF ALL EXISTING UNDERGROUND UTILITIES ARE SHOWN IN APPROXIMATE LOCATIONS ONLY. THE CONTRACTOR SHALL DETERMINE THE EXACT LOCATION OF ALL EXISTING UTILITIES BEFORE COMMENCING WORK. THE CONTRACTOR WILL AGREE TO BE FULLY RESPONSIBLE FOR ANY AND ALL DAMAGES WHICH MIGHT BE INCURRED BY THEIR FAILURE TO EXACTLY LOCATE AND PRESERVE ANY AND ALL UNDERGROUND UTILITIES, STRUCTURES OR FACILITIES. CONTRACTOR SHALL NOTIFY ENGINEER OF ANY DISCREPANCIES 24–HOURS PRIOR TO COMMENCING CONSTRUCTION.

HMT ENGINEERING & SURVEYING
290 S. CASTELL AVE., STE. 100
NEW BRAUNFELS, TX 78130
TBPE FIRM F-10961
TBPLS FIRM 10536000

STATE OF TEXAS — CHRISTOPHER P. VAN HEERDE — 93047 — LICENSED PROFESSIONAL ENGINEER

06/03/2020

EROSION CONTROL DETAILS

VILLAGE AT GRUENE CONDOMINIUMS

NO.	REVISION DESCRIPTION	REVISION DATE

DATE: JUNE 2020
DRAWN BY: LB
DESIGNED BY: HC
REVIEWED BY: SWH–CVH
HMT PROJECT NO.: 170.004

SHEET

C3.2 PI

Drawing Name: N:_Projects\170 – James Jophet\170.004 – Villages at Gruene Garden Homes\CDs\170.004_EROS.dwg User: robertb Jun 03, 2020 – 5:01pm

LEGEND

700	EXISTING CONTOURS
700	PROPOSED CONTOURS
G.C.E.	GENERAL COMMON ELEMENT
U.E.	UTILITY EASEMENT
D.E.	DRAINAGE EASEMENT
	A.D.A. RAMP
	FLOW ARROW
	CoNB SIDEWALK RAMP (SEE DETAIL SHEET C5.11)
	6FT SIDEWALK TO BE CONSTRUCTED BY SITE DEVELOPMENT CONTRACTOR

0 10 20
SCALE: 1" = 20'

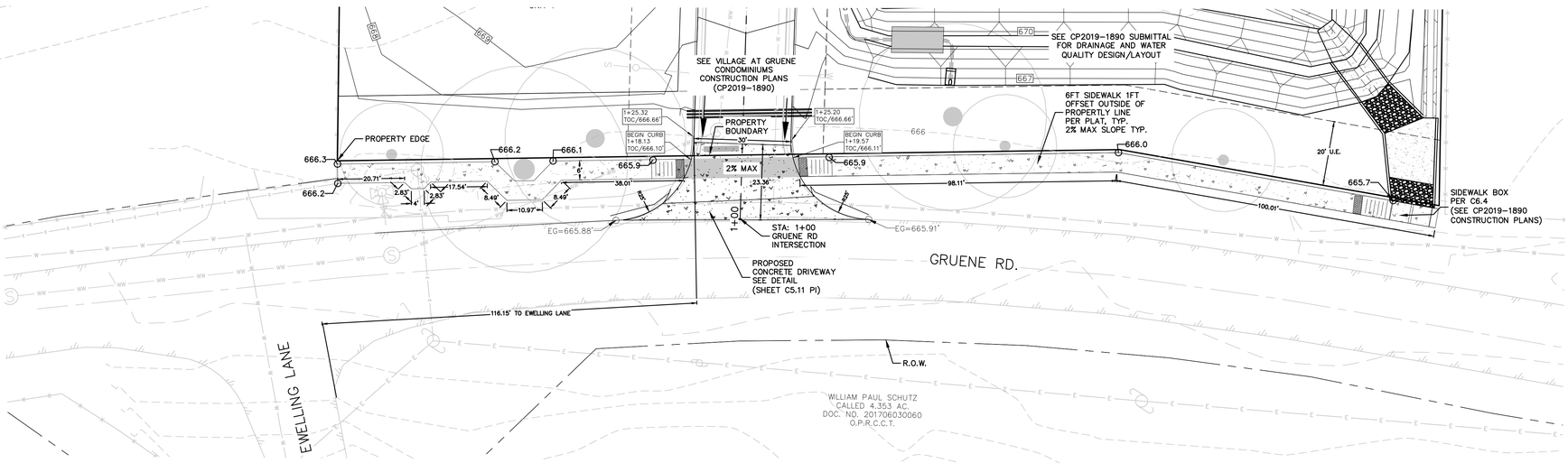

THE LOCATION OF ALL EXISTING UNDERGROUND UTILITIES ARE SHOWN IN APPROXIMATE LOCATIONS ONLY. THE CONTRACTOR SHALL DETERMINE THE EXACT LOCATION OF ALL EXISTING UTILITIES BEFORE COMMENCING WORK. THE CONTRACTOR WILL AGREE TO BE FULLY RESPONSIBLE FOR ANY AND ALL DAMAGES WHICH MIGHT BE INCURRED BY THEIR FAILURE TO EXACTLY LOCATE AND PRESERVE ANY AND ALL UNDERGROUND UTILITIES, STRUCTURES OR FACILITIES. CONTRACTOR SHALL NOTIFY ENGINEER OF ANY DISCREPANCIES 24-HOURS PRIOR TO COMMENCING CONSTRUCTION.

HMT ENGINEERING & SURVEYING
290 S. CASTELL AVE., STE. 100
NEW BRAUNFELS, TX 78130
TBPE FIRM F-10961
TBPLS FIRM 10536000

THIS DOCUMENT IS RELEASED FOR THE PURPOSE OF INTERIM REVIEW UNDER THE AUTHORITY OF CHRISTOPHER P. VAN HEERDE P.E. # 93047 ON 6/3/20. IT IS NOT TO BE USED FOR CONSTRUCTION, BIDDING OR PERMIT PURPOSES.

SUBDIVISION ENTRANCE

VILLAGE AT GRUENE CONDOMINIUMS

NO.	REVISION DESCRIPTION	REVISION DATE

DATE: JUNE 2020
DRAWN BY: LB
DESIGNED BY: HC
REVIEWED BY: SWH-CVH
HMT PROJECT NO.: 170.004

SHEET
C5.0 PI

Drawing Name: N:_Projects\170 - James Jophet\170.004 - Villages at Gruene Garden Homes\C2b\City Permit\170.004_STREET.dwg User: robertb Jun 03, 2020 - 5:02pm

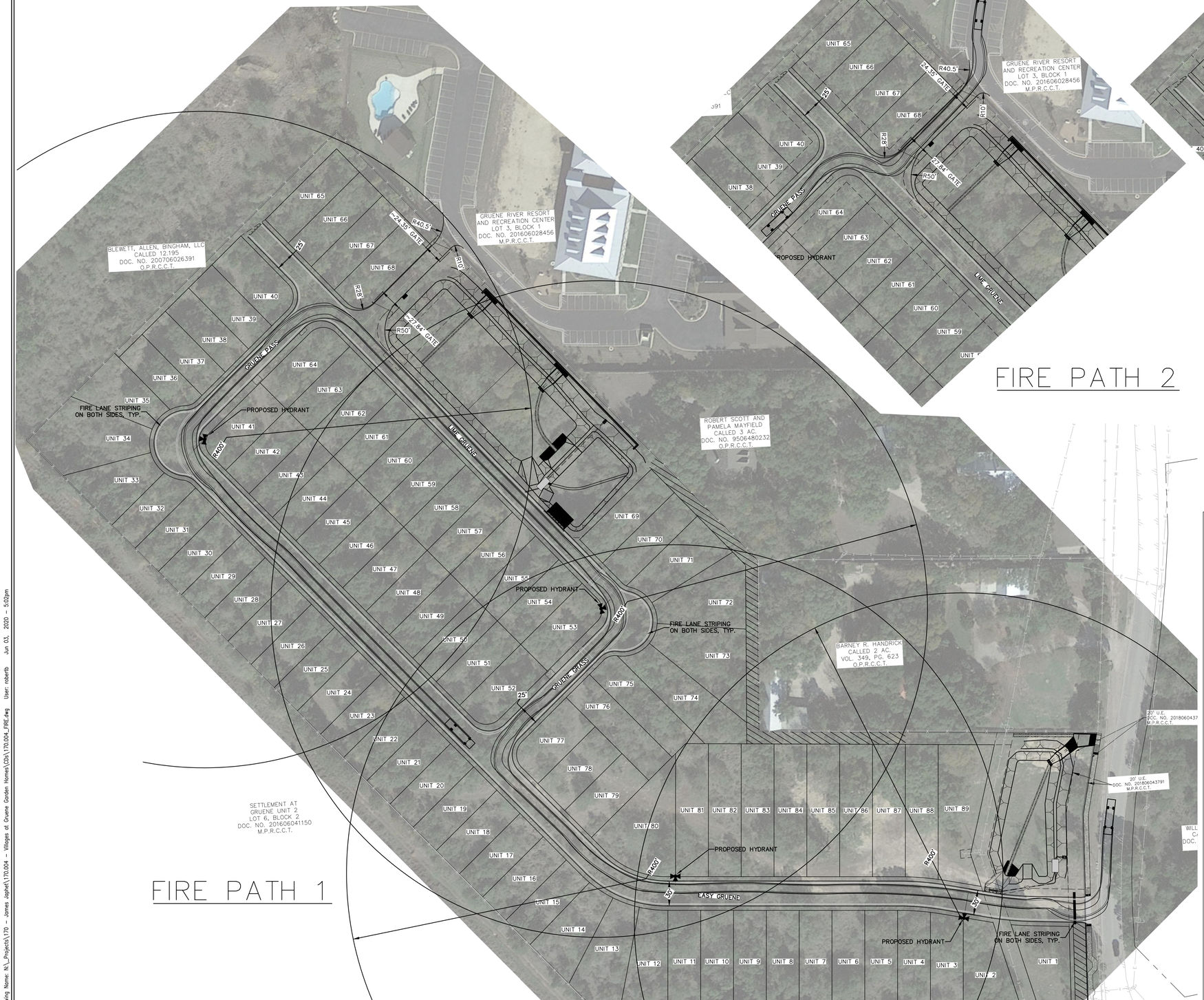

FIRE PATH 1

FIRE PATH 2

FIRE PATH 3

Vehicle Tracking v19.00 - Pool

Vehicle Tracking Vehicle Details **Ref:**

Vehicle Name:	**Fire Ladder Truck -2**
Type:	Rigid vehicle
Category	(Unspecified)
Classification	(Unspecified)
Source:	NBFD
Description:	Typical Ladder Truck
Notes:	
Unit 1 Name:	Fire Ladder Truck -2 Tractor

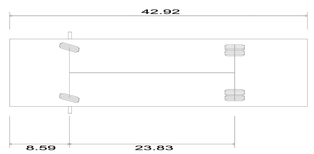

Fire Ladder Truck -2	
Overall Length	42.920ft
Overall Width	9.750ft
Overall Body Height	10.446ft
Min Body Ground Clearance	0.877ft
Track Width	8.083ft
Lock-to-lock time	4.00s
Curb to Curb Turning Radius	45.000ft

Every Effort Has Been Made To Ensure The Accuracy Of This Information
Please Check Data From Your Own Sources

HMT ENGINEERING & SURVEYING
290 S. CASTELL AVE., STE. 100
NEW BRAUNFELS, TX 78130
TBPE FIRM F-10961
TBPLS FIRM 1053600

THIS DOCUMENT IS RELEASED FOR THE PURPOSE OF INTERIM REVIEW UNDER THE AUTHORITY OF CHRISTOPHER P. VAN HEERDE P.E. # 93047 ON 6/3/20. IT IS NOT TO BE USED FOR CONSTRUCTION, BIDDING OR PERMIT PURPOSES.

FIRE ACCESS EXHIBIT

VILLAGE AT GRUENE CONDOMINIUMS

NO.	REVISION DESCRIPTION	REVISION DATE

DATE: JUNE 2020
DRAWN BY: LB
DESIGNED BY: HC
REVIEWED BY: SWH–CVH
HMT PROJECT NO.: 170.004

SHEET
C5.10 PI

Drawing Name: N:_Projects\170 – James Jophek\170.004 – Villages at Gruene Garden Homes\CDs\170.004_FIRE.dwg User: robertb Jun 03, 2020 – 5:02pm

REFERENCE CP2019-1890 FOR GEOTECHNICAL PAVEMENT DESIGN RECOMMENDATIONS, ROAD SECTIONS, SIGNAGE LAYOUT, AND STRIPING SPECIFICATIONS.

DRIVEWAY APRON
(COMMERCIAL - MULTIFAMILY - INDUSTRIAL)
(RADIAL/FLARED)

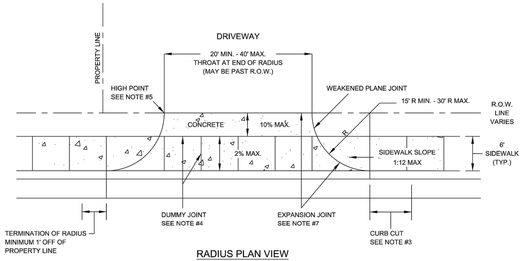

RADIUS PLAN VIEW

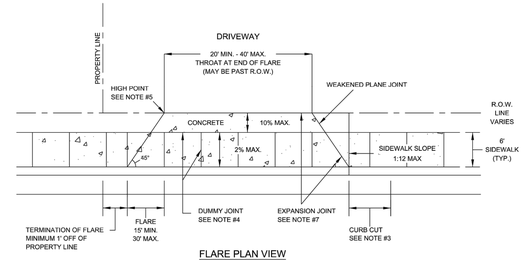

FLARE PLAN VIEW

DATE APPROVED: 07/2008	DWG. NO: ST-015.1	SCALE: N.T.S.
DRAWN BY: RAS	SHEET: 1 OF 2	
FILENAME: DRIVEWAY (COMMERCIAL - MULTIFAMILY - INDUSTRIAL)		

City of New Braunfels — ENGINEERING DEPARTMENT

DRIVEWAY APRON
(COMMERCIAL - MULTIFAMILY - INDUSTRIAL)

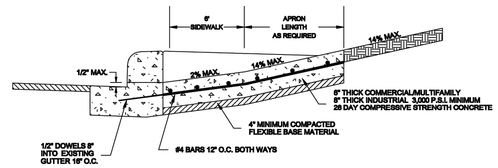

STRUCTURAL SECTION

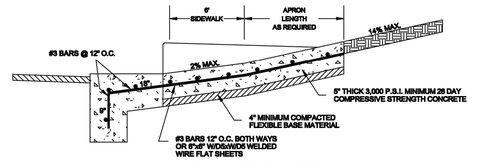

NO EXISTING CURB STRUCTURAL SECTION

NOTES:

1. WHERE GUTTER DOES NOT EXIST DRIVEWAY APRON SHALL EXTEND TO EDGE OF ASPHALT AND SHALL HAVE A MINIMUM 6" WIDE 1' DEEP GRADE BEAM MONOLITHIC AND REINFORCED SIMILAR TO APRON.
2. PLACEMENT OF SIDEWALK SHOWN IS TYPICAL; HOWEVER, ALTERNATIVE SIDEWALK PLACEMENT COMMON TO DRIVEWAY APRON WILL BE CONSIDERED PROVIDED CROSS SLOPE OF SIDEWALK IS NO GREATER THAN 2%.
3. CURB CUT LENGTH NO GREATER THAN AS REQUIRED TO MATCH SLOPE OF ADJACENT SIDEWALK.
4. DUMMY JOINTS TO BE PROVIDED AT MINIMUM 4-FT. INTERVALS PERPENDICULAR TO THE CURB LINE WITHIN THE SIDEWALK AREA AND PARALLEL TO THE SIDEWALK AREA.
5. PROVIDE A MINIMUM 7" HIGH POINT. HIGH POINT HEIGHT SHALL BE MEASURED FROM THE GUTTER FLOW LINE TO THE DRIVEWAY APRON. NOTE HIGH POINT MAY OCCUR OUTSIDE OF ROW.
6. DRIVEWAY THROAT TRANSITION MAY OCCUR OUTSIDE OF ROW.
7. PROVIDE EXPANSION JOINTS AT ALL SIDEWALK AND DRIVEWAY THROAT JOINTS. EXPANSION JOINTS SHALL BE PLACED USING 1/2" ASPHALTIC MATERIAL WITH 1/2" DOWELS 16" O.C.
8. ALL SIDEWALK AND DRIVEWAY CONSTRUCTION SHALL MEET A.D.A. SPECIFICATIONS.

DATE APPROVED: 7/08	DWG. NO: ST-015.2	SCALE: N.T.S.
DRAWN BY: RAS	SHEET: 2 OF 2	
FILENAME: DRIVEWAY (Commercial - Multifamily - Industrial)		
P:\CURRENT NEW BRAUNFELS DETAILS\2008\		

City of New Braunfels — ENGINEERING DEPARTMENT

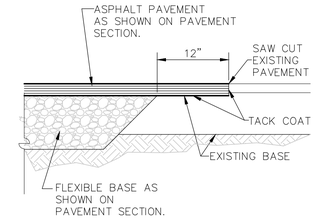

NEW PAVEMENT TO EXISTING
NOT TO SCALE

SIDEWALK
(COMMERCIAL - INDUSTRIAL)

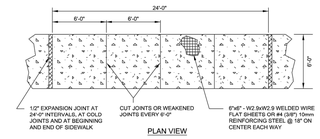

PLAN VIEW

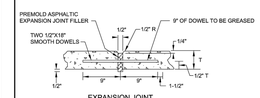

EXPANSION JOINT

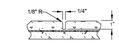

WEAKENED PLANE JOINT

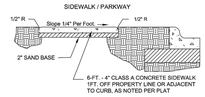

TYPICAL SECTION

NOTES:

1. EXPANSION JOINTS ARE TO BE USED BETWEEN CONCRETE DRIVEWAY AND SIDEWALK.
2. SCORED JOINTS DENOTE SIDEWALK ACROSS THE DRIVEWAY AND ARE TO BE PLACED AT LEAST 1/3 rd. THROUGH THE SLAB THICKNESS.
3. ALL SIDEWALK AND DRIVEWAY CONSTRUCTION SHALL MEET A.D.A. SPECIFICATIONS.

DATE APPROVED: 07/2008	DWG. NO: ST-017	SCALE: N.T.S.
DRAWN BY: RAS	SHEET: 1 OF 1	
FILENAME: SIDEWALK (COMMERCIAL - INDUSTRIAL)		

City of New Braunfels — ENGINEERING DEPARTMENT

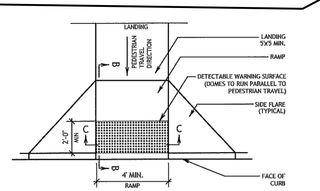

TYPICAL PLACEMENT OF DETECTABLE WARNING SURFACE FOR PERPENDICULAR CURB RAMP.

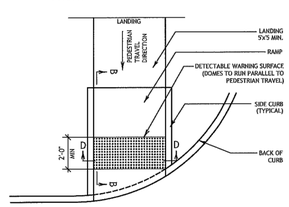

TYPICAL PLACEMENT OF DETECTABLE WARNING SURFACE ON SLOPING RAMP RUN FOR DIRECTIONAL CURB RAMP.

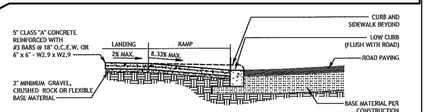

SECTION B-B

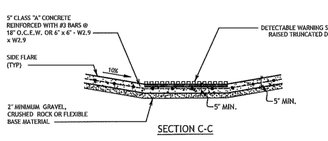

SECTION C-C

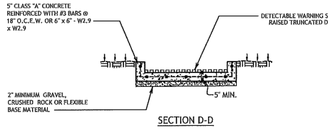

SECTION D-D

CURB RAMP NOTES

1. ALL SLOPES ARE MAXIMUM ALLOWABLE, THE LEAST POSSIBLE SLOPE THAT WILL STILL DRAIN PROPERLY SHOULD BE USED. ADJUST CURB RAMP LENGTH OR GRADE OF APPROACH SIDEWALKS AS DIRECTED.
2. THESE DETAILS ARE FOR REFERENCE ONLY. ACTUAL LOCATIONS OF CURB RAMPS ARE TO BE SHOWN ON THE CONSTRUCTION PLANS. ALL ACCESSIBLE WALK WAYS SHALL BE CONSTRUCTED IN ACCORDANCE WITH THE REQUIREMENTS SET FORTH IN THE AMERICAN'S WITH DISABILITIES ACT (ADA) AND TEXAS ACCESSIBILITY STANDARDS (TAS). CITY ENGINEER OR BUILDING OFFICIAL MAY ADJUST LOCATIONS FOR SAFETY OR UTILITY CLEARANCE.
3. THE MINIMUM STANDARD SIDEWALKS SHALL BE PROVIDED IN ACCORDANCE WITH SECTION 118-49 OF THE NEW BRAUNFELS CODE OF ORDINANCES.
4. ALL LANDINGS WHERE REQUIRED SHALL BE 5'X 5' (60"X60") MINIMUM WITH A MAXIMUM 2% SLOPE IN ANY DIRECTION.
5. RAMP LENGTHS SHALL BE SUFFICIENT TO MAINTAIN A MAXIMUM SLOPE OF 8.33% (1V:12H). MAXIMUM ALLOWABLE CROSS SLOPE ON SIDEWALK AND CURB RAMP SURFACES IS 2% (1V:50H).
6. SIDEWALK GRADES SHALL NOT EXCEED THE GRADE ESTABLISHED FOR THE ADJACENT ROADWAY, ANY SIDEWALK CONSTRUCTION THAT DEVIATES FROM THE GRADE OF THE NATURAL GRADE OF THE ROADWAY TO CREATE A GRADE STEEPER THAN THE EXISTING ROADWAY WILL REQUIRE RAMPS, HANDRAILS, AND LANDINGS IN ACCORDANCE WITH CURRENT ADA AND TAS REQUIREMENTS.
7. PROVIDE FLARED RAMP SIDES WITH A MAXIMUM SLOPE OF 10% (1V:10H) MEASURED ALONG THE CURB LINE. CURB RETURNS MAY BE USED IN-LIEU OF SIDE FLARES IN AREAS NOT NORMALLY WALKED ACROSS BY PEDESTRIANS, BECAUSE THE ADJACENT SURFACE IS VEGETATION OR OTHER NON-WALKING SURFACE OR WHERE THE SIDE APPROACH IS SUBSTANTIALLY OBSTRUCTED.
8. MANEUVERING SPACE AT THE BOTTOM OF CURB RAMPS SHALL BE A MINIMUM OF 4X.4' (48"X48") WHOLLY CONTAINED WITHIN THE CROSSWALK AND WHOLLY OUTSIDE THE PARALLEL VEHICULAR TRAVEL PATH.
9. CROSSWALK DIMENSIONS, CROSSWALK MARKINGS AND STOP BAR LOCATIONS SHALL BE AS SHOWN ELSEWHERE IN THE PLANS. AT INTERSECTIONS WHERE CROSSWALK MARKINGS ARE NOT REQUIRED, CURB RAMPS SHALL BE ALIGNED WITH THEORETICAL CROSSWALKS, OR AS DIRECTED BY THE CITY ENGINEER OR BUILDING OFFICIAL.
10. EXISTING FEATURES THAT COMPLY WITH CURRENT TAS REQUIREMENTS MAY REMAIN IN PLACE UNLESS OTHERWISE SHOWN OR THE PLANS.
11. HANDRAILS ARE NOT REQUIRED ON CURB RAMPS. PROVIDE CURB RAMPS WHEREVER AN ACCESSIBLE ROUTE CROSSES (PENETRATES) A CURB.
12. SEPARATE CURB RAMP AND LANDINGS FROM ADJACENT SIDEWALK AND ANY OTHER ELEMENTS WITH PRE-MOLD OR BOARD JOINT OF 1/2" UNLESS OTHERWISE DIRECTED BY THE CITY ENGINEER OR BUILDING OFFICIAL.
13. PROVIDE A SMOOTH TRANSITION WHERE THE CURB RAMPS CONNECT TO THE STREET.
14. THE CHANGE OF GRADE BETWEEN ADJACENT SURFACES SHALL BE LESS THAN 11%. THE CHANGE OF GRADE SHALL BE DEFINED AS THE ALGEBRAIC DIFFERENCE OF THE ADJACENT SURFACE SLOPES. IN THE CASE OF A STREET ACCESS RAMP DESIGNED AT THE 8.33% MAXIMUM SLOPE, THE ADJACENT PAVEMENT CROSS SLOPE SHALL BE LESS THAN 2.67% (I.E. 8.33-(-2.67)=11). IN ADDITION, THE ADJACENT PAVEMENT CROSS SLOPE SHALL BE LESS THAN OR EQUAL TO 5%.
15. IF THE CHANGE OF GRADE BETWEEN ADJACENT SURFACES IS GREATER THAN OR EQUAL TO 11%, A LEVELING STRIP, 2 FEET IN LENGTH, SHALL BE PROVIDED TO TRANSITION THE ADJACENT SURFACES.
16. ADA RAMP SHALL BE CONSTRUCTED WITH 5" CLASS "A" CONCRETE WITH 2" MINIMUM GRAVEL,CRUSHED ROCK OR FLEXIBLE BASE MATERIAL. REINFORCING STEEL SHALL BE #3 BARS AT 18" O.C.E.W. OR 6"x6" - W2.9 X W2.9 WIRE MESH.
17. THE EXTENTS OF ADA COMPLIANCE IN ALTERATIONS SHALL BE WITHIN THE LIMITS, BOUNDARIES OR SCOPE OF A PLANNED PROJECT AND AS DETERMINED BY THE CITY BUILDING OFFICIAL.

DETECTABLE WARNING NOTES

1. CURB RAMPS OR LANDINGS ABUTTING THE CROSSWALK MUST HAVE A DETECTABLE WARNING SURFACE THAT CONSISTS OF RAISED TRUNCATED DOMES COMPLYING WITH SECTION 705 OF THE TEXAS ACCESSIBILITY STANDARDS (TAS). THE SURFACE MUST CONTRAST VISUALLY WITH ADJOINING SURFACES, INCLUDING SIDE FLARES. FURNISH DARK BROWN OR DARK RED DETECTABLE WARNING SURFACE ADJACENT TO UNCOLORED CONCRETE, UNLESS SPECIFIED ELSEWHERE IN THE PLANS.
2. DETECTABLE WARNING SURFACES MUST BE SLIP RESISTANT AND NOT ALLOW WATER TO ACCUMULATE.
3. ALIGN TRUNCATED DOMES IN THE DIRECTION OF PEDESTRIAN TRAVEL WHEN ENTERING THE STREET.
4. DETECTABLE WARNING SURFACES SHALL BE A MINIMUM OF 24" IN DEPTH IN THE DIRECTION OF PEDESTRIAN TRAVEL, AND EXTEND THE FULL WIDTH OF THE CURB RAMP OR LANDING WHERE THE PEDESTRIAN ACCESS ROUTE ENTERS THE STREET.
5. DETECTABLE WARNING SURFACES SHALL BE LOCATED SO THAT THE EDGE NEAREST THE CURB LINE IS AT THE BACK OF CURB. ALIGN THE ROWS OF DOMES TO BE PERPENDICULAR TO THE GRADE BREAK BETWEEN THE RAMP RUN AND THE STREET. DETECTABLE WARNING SURFACES MAY BE CURVED ALONG THE CORNER RADIUS.
6. DETECTABLE WARNING MATERIALS MUST MEET TXDOT DEPARTMENTAL MATERIALS SPECIFICATION DMS 4350 AND BE LISTED ON THE MATERIAL PRODUCER LIST. INSTALL PRODUCTS IN ACCORDANCE WITH MANUFACTURER'S SPECIFICATIONS.
7. DETECTABLE WARNING PAVERS SHALL NOT BE PERMITTED WITHOUT THE APPROVAL BY THE PUBLIC WORKS DEPARTMENT.

City of New Braunfels
ENGINEERING DIVISION
550 LANDA STREET
NEW BRAUNFELS, TEXAS 78130
PHONE: 830 221 4020
FAX 830 628 3600

CURB RAMP STANDARDS		
APPROVED DATE: 05/18/2017	DWG. NO.: ST-019	SCALE: AS NOTED
DRAWN BY: RC	CONTACT: GF	SHEET: 1 OF 1

DISCLAIMER:
The use of this standard is governed by the "Texas Engineering Practice Act". No warranty of any kind is made by the City of New Braunfels for any purpose whatsoever.

HMT ENGINEERING & SURVEYING
290 S. CASTELL AVE., STE. 100
NEW BRAUNFELS, TX 78130
TBPE FIRM F-10961
TBPLS FIRM 10536 00

THIS DOCUMENT IS RELEASED FOR THE PURPOSE OF INTERIM REVIEW UNDER THE AUTHORITY OF CHRISTOPHER P. VAN HEERDE P.E. # 93047 ON 6/3/20. IT IS NOT TO BE USED FOR CONSTRUCTION, BIDDING OR PERMIT PURPOSES.

STREET DETAILS

VILLAGE AT GRUENE CONDOMINIUMS

NO.	REVISION DESCRIPTION	REVISION DATE

DATE: JUNE 2020
DRAWN BY: LB
DESIGNED BY: HC
REVIEWED BY: SWH-CVH
HMT PROJECT NO.: 170.004

SHEET
C5.11 PI

Drawing Name: N:_Projects\170 - James Jophet\170.004 - Villages at Gruene Garden Homes\Cds\City Permit\170.004_STREET.dwg User: robertb Jun 03, 2020 - 5:02pm

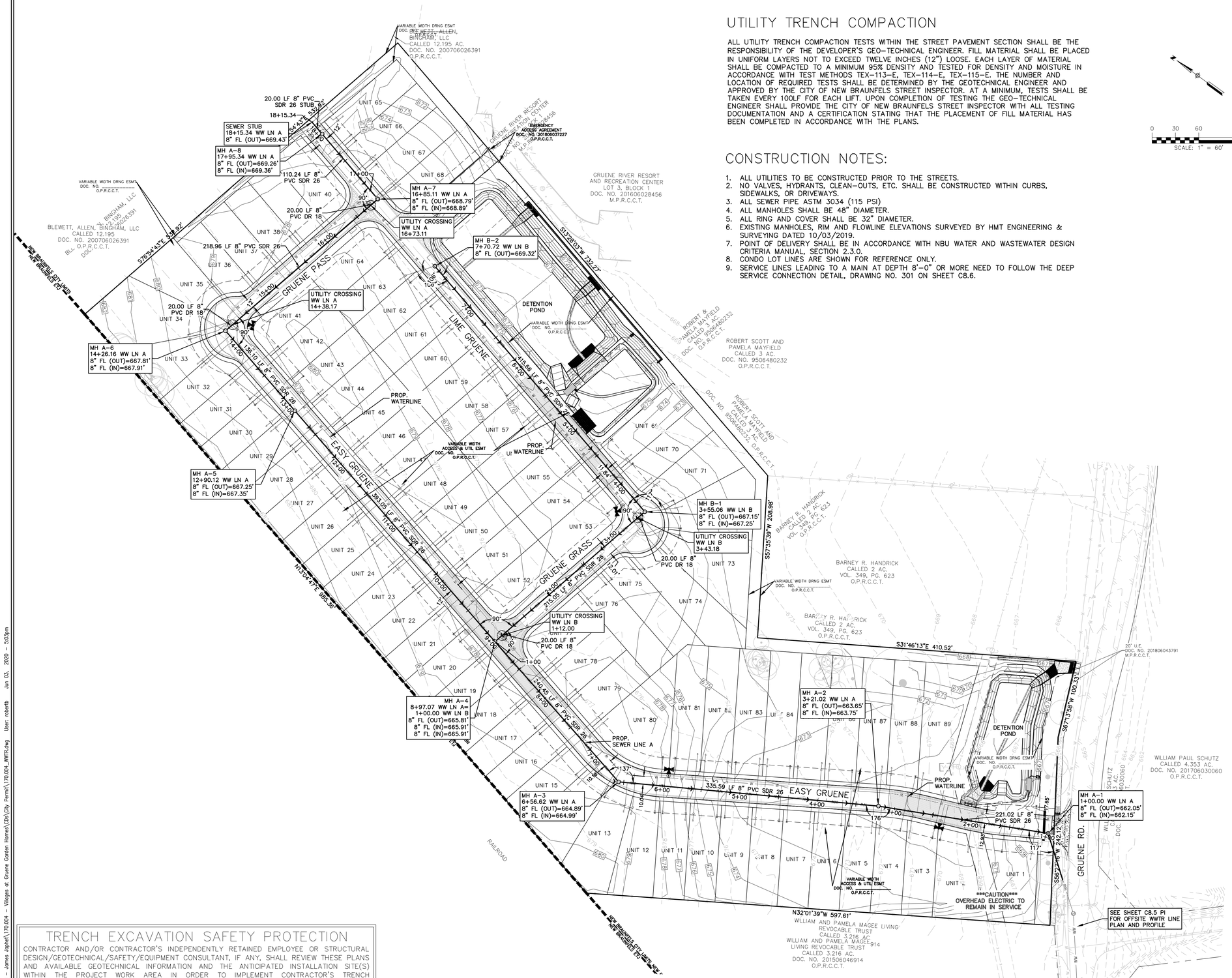

UTILITY TRENCH COMPACTION

ALL UTILITY TRENCH COMPACTION TESTS WITHIN THE STREET PAVEMENT SECTION SHALL BE THE RESPONSIBILITY OF THE DEVELOPER'S GEO-TECHNICAL ENGINEER. FILL MATERIAL SHALL BE PLACED IN UNIFORM LAYERS NOT TO EXCEED TWELVE INCHES (12") LOOSE. EACH LAYER OF MATERIAL SHALL BE COMPACTED TO A MINIMUM 95% DENSITY AND TESTED FOR DENSITY AND MOISTURE IN ACCORDANCE WITH TEST METHODS TEX-113-E, TEX-114-E, TEX-115-E. THE NUMBER AND LOCATION OF REQUIRED TESTS SHALL BE DETERMINED BY THE GEOTECHNICAL ENGINEER AND APPROVED BY THE CITY OF NEW BRAUNFELS STREET INSPECTOR. AT A MINIMUM, TESTS SHALL BE TAKEN EVERY 100LF FOR EACH LIFT. UPON COMPLETION OF TESTING THE GEO-TECHNICAL ENGINEER SHALL PROVIDE THE CITY OF NEW BRAUNFELS STREET INSPECTOR WITH ALL TESTING DOCUMENTATION AND A CERTIFICATION STATING THAT THE PLACEMENT OF FILL MATERIAL HAS BEEN COMPLETED IN ACCORDANCE WITH THE PLANS.

CONSTRUCTION NOTES:

1. ALL UTILITIES TO BE CONSTRUCTED PRIOR TO THE STREETS.
2. NO VALVES, HYDRANTS, CLEAN-OUTS, ETC. SHALL BE CONSTRUCTED WITHIN CURBS, SIDEWALKS, OR DRIVEWAYS.
3. ALL SEWER PIPE ASTM 3034 (115 PSI)
4. ALL MANHOLES SHALL BE 48" DIAMETER.
5. ALL RING AND COVER SHALL BE 32" DIAMETER.
6. EXISTING MANHOLES, RIM AND FLOWLINE ELEVATIONS SURVEYED BY HMT ENGINEERING & SURVEYING DATED 10/03/2019.
7. POINT OF DELIVERY SHALL BE IN ACCORDANCE WITH NBU WATER AND WASTEWATER DESIGN CRITERIA MANUAL, SECTION 2.3.0.
8. CONDO LOT LINES ARE SHOWN FOR REFERENCE ONLY.
9. SERVICE LINES LEADING TO A MAIN AT DEPTH 8'-0" OR MORE NEED TO FOLLOW THE DEEP SERVICE CONNECTION DETAIL, DRAWING NO. 301 ON SHEET C8.6.

0 30 60 120
SCALE: 1" = 60'

LEGEND

700	EXISTING CONTOURS
700	PROPOSED CONTOURS
B.L.	BUILDING SETBACK LINE
U.E.	UTILITY EASEMENT
D.E.	DRAINAGE EASEMENT
	EXISTING WASTEWATER LINE
	PROPOSED WASTEWATER LINE
	PROPOSED WASTEWATER SERVICE
	UTILITY CROSSING
1	ENCOUNTERED FEATURE CLOSED PER TCEQ ENCOUNTERED FEATURE ENCLOSURE PLAN, APPROVED APRIL 2, 2020.

VILLAGE AT GRUENE ONSITE SEWER COMPONENTS LIST	
LUE COUNT = 89	
COUNT	PART
2,307 LF	8" SDR 26 PVC MAIN
80 LF	8" DR 18 PVC MAIN
10	MANHOLES
89	SERVICE LINES & CLEANOUT

* OVERALL WASTEWATER LAYOUT IS REFERENCED AS C8.1 OF CH2019-1890 CONSTRUCTION DOCUMENTS

THE LOCATION OF ALL EXISTING UNDERGROUND UTILITIES ARE SHOWN IN APPROXIMATE LOCATIONS ONLY. THE CONTRACTOR SHALL DETERMINE THE EXACT LOCATION OF ALL EXISTING UTILITIES BEFORE COMMENCING WORK. THE CONTRACTOR WILL AGREE TO BE FULLY RESPONSIBLE FOR ANY AND ALL DAMAGES WHICH MIGHT BE INCURRED BY THEIR FAILURE TO EXACTLY LOCATE AND PRESERVE ANY AND ALL UNDERGROUND UTILITIES, STRUCTURES OR FACILITIES. CONTRACTOR SHALL NOTIFY ENGINEER OF ANY DISCREPANCIES 24-HOURS PRIOR TO COMMENCING CONSTRUCTION.

TRENCH EXCAVATION SAFETY PROTECTION

CONTRACTOR AND/OR CONTRACTOR'S INDEPENDENTLY RETAINED EMPLOYEE OR STRUCTURAL DESIGN/GEOTECHNICAL/SAFETY/EQUIPMENT CONSULTANT, IF ANY, SHALL REVIEW THESE PLANS AND AVAILABLE GEOTECHNICAL INFORMATION AND THE ANTICIPATED INSTALLATION SITE(S) WITHIN THE PROJECT WORK AREA IN ORDER TO IMPLEMENT CONTRACTOR'S TRENCH EXCAVATION SAFETY PROTECTION SYSTEMS, PROGRAMS AND/OR PROCEDURES FOR THE PROJECT DESCRIBED IN THE CONTRACT DOCUMENTS. THE CONTRACTORS IMPLEMENTATION OF THESE SYSTEMS, PROGRAMS AND/OR PROCEDURES SHALL PROVIDE FOR ADEQUATE TRENCH EXCAVATION SAFETY PROTECTION THAT COMPLY WITH AS A MINIMUM, OSHA STANDARDS FOR TRENCH EXCAVATIONS. SPECIFICALLY, CONTRACTOR AND/OR CONTRACTOR'S INDEPENDENTLY RETAINED EMPLOYEE OR SAFETY CONSULTANT SHALL IMPLEMENT A TRENCH SAFETY PROGRAM IN ACCORDANCE WITH OSHA STANDARDS GOVERNING THE PRESENCE AND ACTIVITIES OF INDIVIDUALS WORKING IN AND AROUND TRENCH EXCAVATIONS.

HMT ENGINEERING & SURVEYING
290 S. CASTELL AVE., STE. 100
NEW BRAUNFELS, TX 78130
TBPE FIRM F-10961
TBPLS FIRM 10536000

THIS DOCUMENT IS RELEASED FOR THE PURPOSE OF INTERIM REVIEW UNDER THE AUTHORITY OF CHRISTOPHER P. VAN HEERDE P.E. # 93047 ON 6/3/20. IT IS NOT TO BE USED FOR CONSTRUCTION, BIDDING OR PERMIT PURPOSES.

OVERALL WASTEWATER PLAN

VILLAGE AT GRUENE CONDOMINIUMS

NO.	REVISION DESCRIPTION	REVISION DATE

DATE: JUNE 2020
DRAWN BY: LB
DESIGNED BY: HC
REVIEWED BY: SWH-CVH
HMT PROJECT NO.: 170.004

SHEET
C8.1 PI

Drawing Name: N:_Projects\170 - Jones Jagnet\170.004 - Villages at Gruene Garden Homes\Cds\City Permit\170.004_WWTR.dwg User: robertb Jun 03, 2020 - 5:03pm

UTILITY TRENCH COMPACTION

ALL UTILITY TRENCH COMPACTION TESTS WITHIN THE STREET PAVEMENT SECTION SHALL BE THE RESPONSIBILITY OF THE DEVELOPER'S GEO-TECHNICAL ENGINEER. FILL MATERIAL SHALL BE PLACED IN UNIFORM LAYERS NOT TO EXCEED TWELVE INCHES (12") LOOSE. EACH LAYER OF MATERIAL SHALL BE COMPACTED TO A MINIMUM 95% DENSITY AND TESTED FOR DENSITY AND MOISTURE IN ACCORDANCE WITH TEST METHODS TEX-113-E, TEX-114-E, TEX-115-E. THE NUMBER AND LOCATION OF REQUIRED TESTS SHALL BE DETERMINED BY THE GEOTECHNICAL ENGINEER AND APPROVED BY THE CITY OF NEW BRAUNFELS STREET INSPECTOR. AT A MINIMUM, TESTS SHALL BE TAKEN EVERY 100LF FOR EACH LIFT. UPON COMPLETION OF TESTING THE GEO-TECHNICAL ENGINEER SHALL PROVIDE THE CITY OF NEW BRAUNFELS STREET INSPECTOR WITH ALL TESTING DOCUMENTATION AND A CERTIFICATION STATING THAT THE PLACEMENT OF FILL MATERIAL HAS BEEN COMPLETED IN ACCORDANCE WITH THE PLANS.

CONSTRUCTION NOTES:

1. ALL UTILITIES TO BE CONSTRUCTED PRIOR TO THE STREETS.
2. NO VALVES, HYDRANTS, CLEAN-OUTS, ETC. SHALL BE CONSTRUCTED WITHIN CURBS, SIDEWALKS, OR DRIVEWAYS.
3. ALL SEWER PIPE ASTM 3034 (115 PSI)
4. ALL MANHOLES SHALL BE 48" DIAMETER.
5. ALL RING AND COVER SHALL BE 32" DIAMETER.
6. EXISTING MANHOLES, RIM AND FLOWLINE ELEVATIONS SURVEYED BY HMT ENGINEERING & SURVEYING DATED 10/03/2019.
7. POINT OF DELIVERY SHALL BE IN ACCORDANCE WITH NBU WATER AND WASTEWATER DESIGN CRITERIA MANUAL, SECTION 2.3.0.
8. CONDO LOT LINES ARE SHOWN FOR REFERENCE ONLY.
9. SERVICE LINES LEADING TO A MAIN AT DEPTH 8'-0" OR MORE NEED TO FOLLOW THE DEEP SERVICE CONNECTION DETAIL, DRAWING NO. 301 ON SHEET C8.6.

LEGEND

- EXISTING CONTOURS
- PROPOSED CONTOURS
- B.L. BUILDING SETBACK LINE
- U.E. UTILITY EASEMENT
- D.E. DRAINAGE EASEMENT
- EXISTING WASTEWATER LINE
- PROPOSED WASTEWATER LINE
- PROPOSED WASTEWATER SERVICE
- UTILITY CROSSING

0 25 50 100
SCALE: 1" = 50' HORIZ.
SCALE: 1" = 5' VERT.

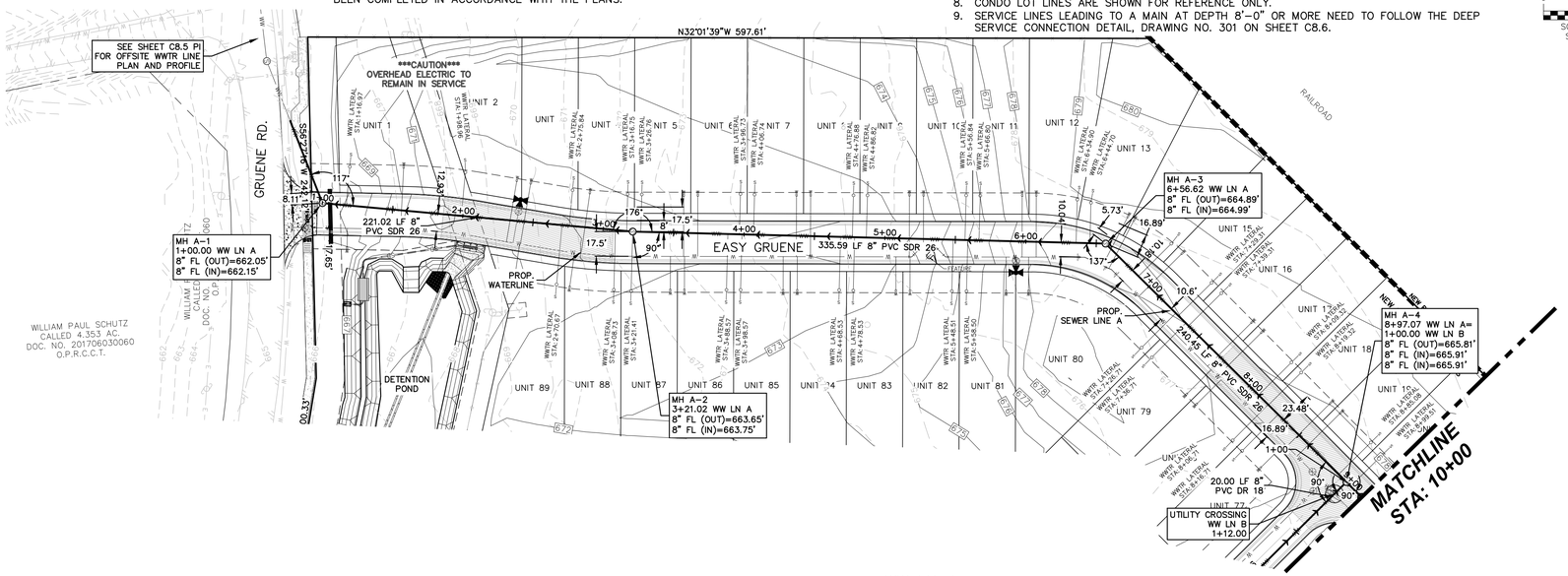

WW LN A
0+50 – 10+00

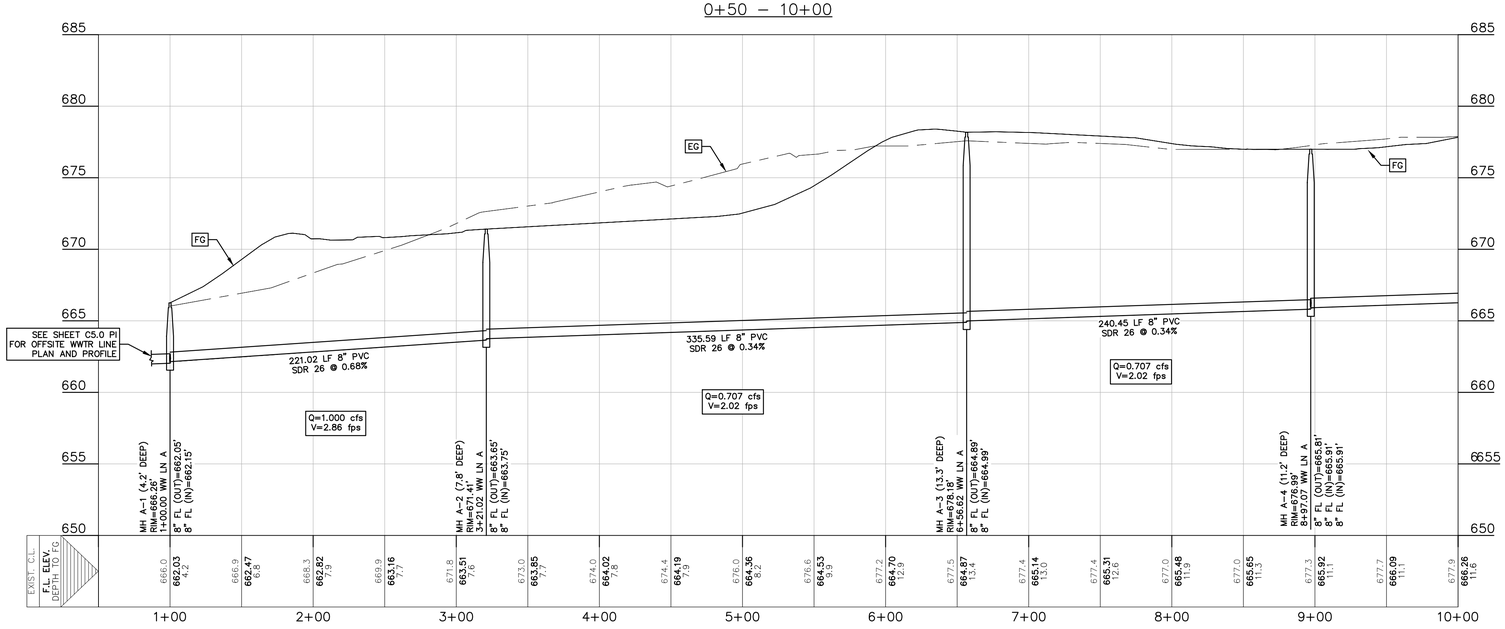

VILLAGE AT GRUENE ONSITE SEWER COMPONENTS LIST	
LUE COUNT = 89	
COUNT	PART
2,307 LF	8" SDR 26 PVC MAIN
80 LF	8" DR 18 PVC MAIN
10	MANHOLES
89	SERVICE LINES & CLEANOUT

* OVERALL WASTEWATER LAYOUT IS REFERENCED AS C8.2 OF CH2019-1890 CONSTRUCTION DOCUMENTS

REFER TO THE COVER SHEET FOR BENCHMARK INFORMATION.

THE LOCATION OF ALL EXISTING UNDERGROUND UTILITIES ARE SHOWN IN APPROXIMATE LOCATIONS ONLY. THE CONTRACTOR SHALL DETERMINE THE EXACT LOCATION OF ALL EXISTING UTILITIES BEFORE COMMENCING WORK. THE CONTRACTOR WILL AGREE TO BE FULLY RESPONSIBLE FOR ANY AND ALL DAMAGES WHICH MIGHT BE INCURRED BY THEIR FAILURE TO EXACTLY LOCATE AND PRESERVE ANY AND ALL UNDERGROUND UTILITIES, STRUCTURES OR FACILITIES. CONTRACTOR SHALL NOTIFY ENGINEER OF ANY DISCREPANCIES 24-HOURS PRIOR TO COMMENCING CONSTRUCTION.

TRENCH EXCAVATION SAFETY PROTECTION

CONTRACTOR AND/OR CONTRACTOR'S INDEPENDENTLY RETAINED EMPLOYEE OR STRUCTURAL DESIGN/GEOTECHNICAL/SAFETY/EQUIPMENT CONSULTANT, IF ANY, SHALL REVIEW THESE PLANS AND AVAILABLE GEOTECHNICAL INFORMATION AND THE ANTICIPATED INSTALLATION SITE(S) WITHIN THE PROJECT WORK AREA IN ORDER TO IMPLEMENT CONTRACTOR'S TRENCH EXCAVATION SAFETY PROTECTION SYSTEMS, PROGRAMS AND/OR PROCEDURES FOR THE PROJECT DESCRIBED IN THE CONTRACT DOCUMENTS. THE CONTRACTORS IMPLEMENTATION OF THESE SYSTEMS, PROGRAMS AND/OR PROCEDURES SHALL PROVIDE FOR ADEQUATE TRENCH EXCAVATION SAFETY PROTECTION THAT COMPLY WITH AS A MINIMUM, OSHA STANDARDS FOR TRENCH EXCAVATIONS. SPECIFICALLY, CONTRACTOR AND/OR CONTRACTOR'S INDEPENDENTLY RETAINED EMPLOYEE OR SAFETY CONSULTANT SHALL IMPLEMENT A TRENCH SAFETY PROGRAM IN ACCORDANCE WITH OSHA STANDARDS GOVERNING THE PRESENCE AND ACTIVITIES OF INDIVIDUALS WORKING IN AND AROUND TRENCH EXCAVATIONS.

HMT ENGINEERING & SURVEYING
290 S. CASTELL AVE., STE. 100
NEW BRAUNFELS, TX 78130
TBPE FIRM F-10961
TBPLS FIRM 10536000

THIS DOCUMENT IS RELEASED FOR THE PURPOSE OF INTERIM REVIEW UNDER THE AUTHORITY OF CHRISTOPHER P. VAN HEERDE P.E. # 93047 ON 6/3/20. IT IS NOT TO BE USED FOR CONSTRUCTION, BIDDING OR PERMIT PURPOSES.

WASTEWATER LINE A PLAN AND PROFILE (1 OF 2)

VILLAGE AT GRUENE CONDOMINIUMS

NO.	REVISION DESCRIPTION	REVISION DATE

DATE: JUNE 2020
DRAWN BY: LB
DESIGNED BY: HC
REVIEWED BY: SWH-CVH
HMT PROJECT NO.: 170.004

SHEET
C8.2 PI

Drawing Name: N:_Projects\170 - James Jophet\170.004 - Villages at Gruene Garden Homes\C2b\City Permit\170.004_WWTR.dwg User: robertb Jun 03, 2020 - 5:03pm

UTILITY TRENCH COMPACTION

ALL UTILITY TRENCH COMPACTION TESTS WITHIN THE STREET PAVEMENT SECTION SHALL BE THE RESPONSIBILITY OF THE DEVELOPER'S GEO-TECHNICAL ENGINEER. FILL MATERIAL SHALL BE PLACED IN UNIFORM LAYERS NOT TO EXCEED TWELVE INCHES (12") LOOSE. EACH LAYER OF MATERIAL SHALL BE COMPACTED TO A MINIMUM 95% DENSITY AND TESTED FOR DENSITY AND MOISTURE IN ACCORDANCE WITH TEST METHODS TEX-113-E, TEX-114-E, TEX-115-E. THE NUMBER AND LOCATION OF REQUIRED TESTS SHALL BE DETERMINED BY THE GEOTECHNICAL ENGINEER AND APPROVED BY THE CITY OF NEW BRAUNFELS STREET INSPECTOR. AT A MINIMUM, TESTS SHALL BE TAKEN EVERY 100LF FOR EACH LIFT. UPON COMPLETION OF TESTING THE GEO-TECHNICAL ENGINEER SHALL PROVIDE THE CITY OF NEW BRAUNFELS STREET INSPECTOR WITH ALL TESTING DOCUMENTATION AND A CERTIFICATION STATING THAT THE PLACEMENT OF FILL MATERIAL HAS BEEN COMPLETED IN ACCORDANCE WITH THE PLANS.

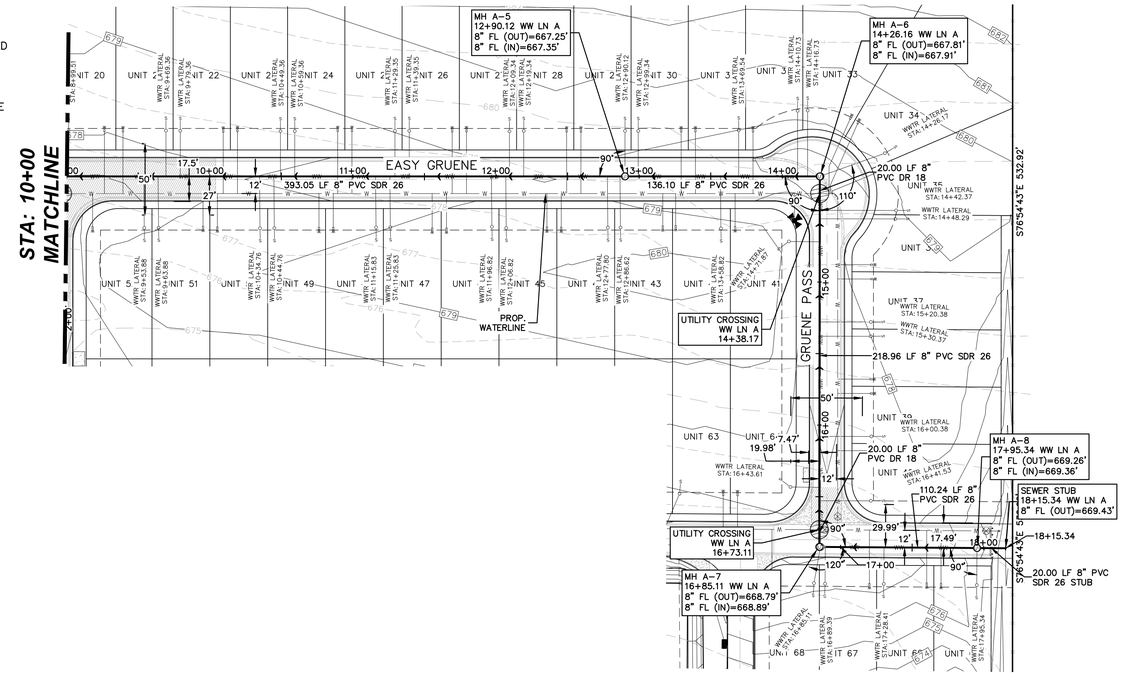

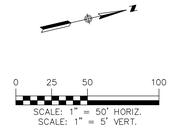

LEGEND

- EXISTING CONTOURS
- PROPOSED CONTOURS
- B.L. BUILDING SETBACK LINE
- U.E. UTILITY EASEMENT
- D.E. DRAINAGE EASEMENT
- EXISTING WASTEWATER LINE
- PROPOSED WASTEWATER LINE
- PROPOSED WASTEWATER SERVICE
- UTILITY CROSSING

CONSTRUCTION NOTES:

1. ALL UTILITIES TO BE CONSTRUCTED PRIOR TO THE STREETS.
2. NO VALVES, HYDRANTS, CLEAN-OUTS, ETC. SHALL BE CONSTRUCTED WITHIN CURBS, SIDEWALKS, OR DRIVEWAYS.
3. ALL SEWER PIPE ASTM 3034 (115 PSI)
4. ALL MANHOLES SHALL BE 48" DIAMETER.
5. ALL RING AND COVER SHALL BE 32" DIAMETER.
6. EXISTING MANHOLES, RIM AND FLOWLINE ELEVATIONS SURVEYED BY HMT ENGINEERING & SURVEYING DATED 10/03/2019.
7. POINT OF DELIVERY SHALL BE IN ACCORDANCE WITH NBU WATER AND WASTEWATER DESIGN CRITERIA MANUAL, SECTION 2.3.0.
8. CONDO LOT LINES ARE SHOWN FOR REFERENCE ONLY.
9. SERVICE LINES LEADING TO A MAIN AT DEPTH 8'-0" OR MORE NEED TO FOLLOW THE DEEP SERVICE CONNECTION DETAIL, DRAWING NO. 301 ON SHEET C8.6.

WW LN A
10+00 – 18+50

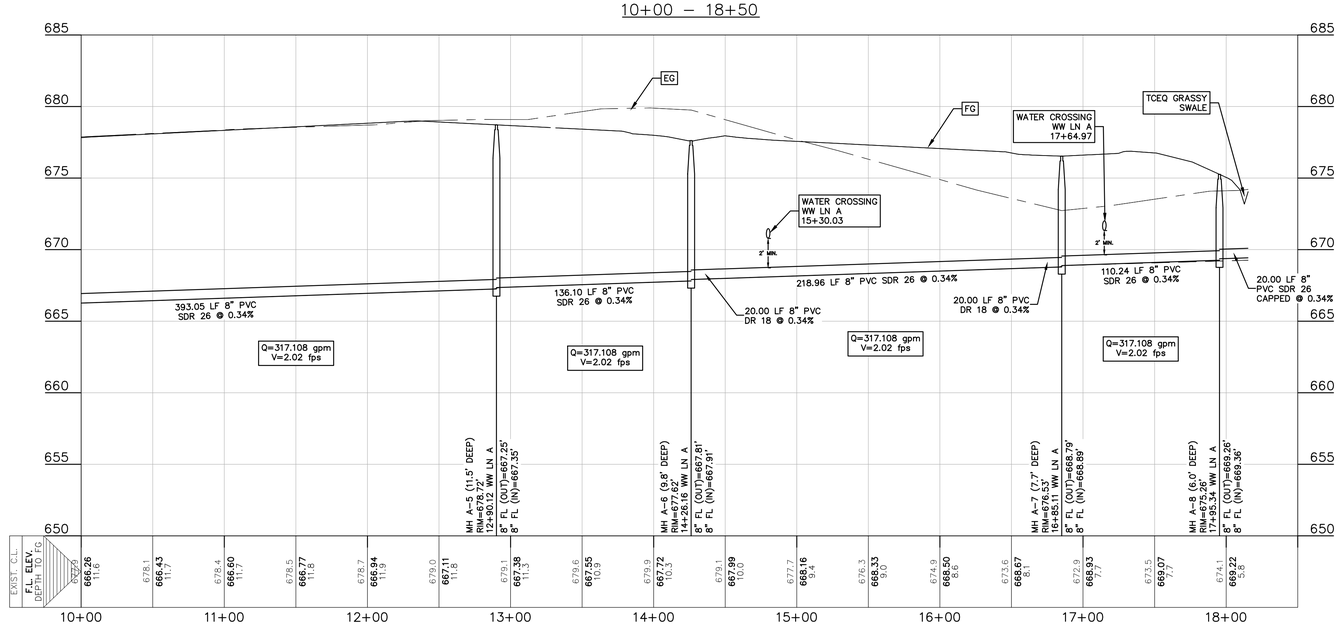

VILLAGE AT GRUENE ONSITE SEWER COMPONENTS LIST	
LUE COUNT = 89	
COUNT	PART
2,307 LF	8" SDR 26 PVC MAIN
80 LF	8" DR 18 PVC MAIN
10	MANHOLES
89	SERVICE LINES & CLEANOUT

* OVERALL WASTEWATER LAYOUT IS REFERENCED AS C8.3 OF CH2019-1890 CONSTRUCTION DOCUMENTS

REFER TO THE COVER SHEET FOR BENCHMARK INFORMATION.

THE LOCATION OF ALL EXISTING UNDERGROUND UTILITIES ARE SHOWN IN APPROXIMATE LOCATIONS ONLY. THE CONTRACTOR SHALL DETERMINE THE EXACT LOCATION OF ALL EXISTING UTILITIES BEFORE COMMENCING WORK. THE CONTRACTOR WILL AGREE TO BE FULLY RESPONSIBLE FOR ANY AND ALL DAMAGES WHICH MIGHT BE INCURRED BY THEIR FAILURE TO EXACTLY LOCATE AND PRESERVE ANY AND ALL UNDERGROUND UTILITIES, STRUCTURES OR FACILITIES. CONTRACTOR SHALL NOTIFY ENGINEER OF ANY DISCREPANCIES 24-HOURS PRIOR TO COMMENCING CONSTRUCTION.

TRENCH EXCAVATION SAFETY PROTECTION

CONTRACTOR AND/OR CONTRACTOR'S INDEPENDENTLY RETAINED EMPLOYEE OR STRUCTURAL DESIGN/GEOTECHNICAL/SAFETY/EQUIPMENT CONSULTANT, IF ANY, SHALL REVIEW THESE PLANS AND AVAILABLE GEOTECHNICAL INFORMATION AND THE ANTICIPATED INSTALLATION SITE(S) WITHIN THE PROJECT WORK AREA IN ORDER TO IMPLEMENT CONTRACTOR'S TRENCH EXCAVATION SAFETY PROTECTION SYSTEMS, PROGRAMS AND/OR PROCEDURES FOR THE PROJECT DESCRIBED IN THE CONTRACT DOCUMENTS. THE CONTRACTORS IMPLEMENTATION OF THESE SYSTEMS, PROGRAMS AND/OR PROCEDURES SHALL PROVIDE FOR ADEQUATE TRENCH EXCAVATION SAFETY PROTECTION THAT COMPLY WITH AS A MINIMUM, OSHA STANDARDS FOR TRENCH EXCAVATIONS. SPECIFICALLY, CONTRACTOR AND/OR CONTRACTOR'S INDEPENDENTLY RETAINED EMPLOYEE OR SAFETY CONSULTANT SHALL IMPLEMENT A TRENCH SAFETY PROGRAM IN ACCORDANCE WITH OSHA STANDARDS GOVERNING THE PRESENCE AND ACTIVITIES OF INDIVIDUALS WORKING IN AND AROUND TRENCH EXCAVATIONS.

HMT ENGINEERING & SURVEYING
290 S. CASTELL AVE., STE. 100
NEW BRAUNFELS, TX 78130
TBPE FIRM F-10961
TBPLS FIRM 10536000

THIS DOCUMENT IS RELEASED FOR THE PURPOSE OF INTERIM REVIEW UNDER THE AUTHORITY OF CHRISTOPHER P. VAN HEERDE P.E. # 93047 ON 6/3/20. IT IS NOT TO BE USED FOR CONSTRUCTION, BIDDING OR PERMIT PURPOSES.

WASTEWATER LINE A PLAN AND PROFILE (2 OF 2)

VILLAGE AT GRUENE CONDOMINIUMS

NO.	REVISION DESCRIPTION	REVISION DATE

DATE: JUNE 2020
DRAWN BY: LB
DESIGNED BY: HC
REVIEWED BY: SWH-CVH
HMT PROJECT NO.: 170.004

SHEET
C8.3 PI

Drawing Name: N:_Projects\170 - James Jophet\170.004 - Villages at Gruene Garden Homes\C8\City Permit\170.004_WWTR.dwg User: robertb Jun 03, 2020 - 5:03pm

TRENCH EXCAVATION SAFETY PROTECTION

CONTRACTOR AND/OR CONTRACTOR'S INDEPENDENTLY RETAINED EMPLOYEE OR STRUCTURAL DESIGN/GEOTECHNICAL/SAFETY/EQUIPMENT CONSULTANT, IF ANY, SHALL REVIEW THESE PLANS AND AVAILABLE GEOTECHNICAL INFORMATION AND THE ANTICIPATED INSTALLATION SITE(S) WITHIN THE PROJECT WORK AREA IN ORDER TO IMPLEMENT CONTRACTOR'S TRENCH EXCAVATION SAFETY PROTECTION SYSTEMS, PROGRAMS AND/OR PROCEDURES FOR THE PROJECT DESCRIBED IN THE CONTRACT DOCUMENTS. THE CONTRACTORS IMPLEMENTATION OF THESE SYSTEMS, PROGRAMS AND/OR PROCEDURES SHALL PROVIDE FOR ADEQUATE TRENCH EXCAVATION SAFETY PROTECTION THAT COMPLY WITH AS A MINIMUM, OSHA STANDARDS FOR TRENCH EXCAVATIONS. SPECIFICALLY, CONTRACTOR AND/OR CONTRACTOR'S INDEPENDENTLY RETAINED EMPLOYEE OR SAFETY CONSULTANT SHALL IMPLEMENT A TRENCH SAFETY PROGRAM IN ACCORDANCE WITH OSHA STANDARDS GOVERNING THE PRESENCE AND ACTIVITIES OF INDIVIDUALS WORKING IN AND AROUND TRENCH EXCAVATIONS.

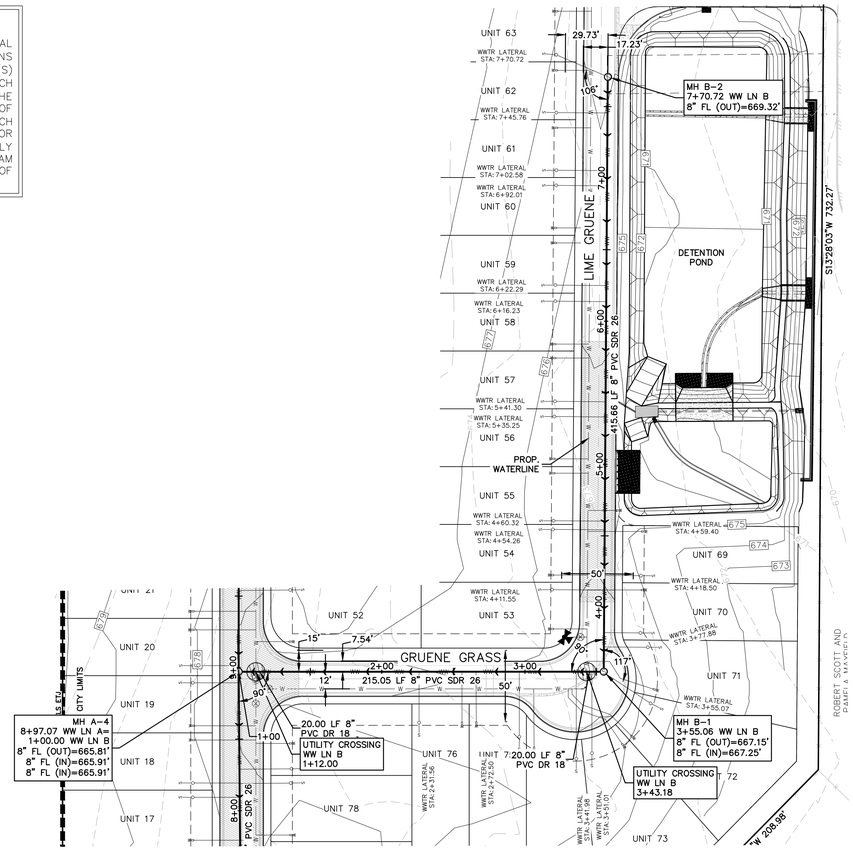

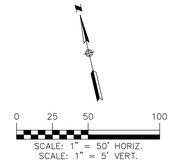

LEGEND

700	EXISTING CONTOURS
700	PROPOSED CONTOURS
B.L.	BUILDING SETBACK LINE
U.E.	UTILITY EASEMENT
D.E.	DRAINAGE EASEMENT
	EXISTING WASTEWATER LINE
	PROPOSED WASTEWATER LINE
	PROPOSED WASTEWATER SERVICE
	UTILITY CROSSING

CONSTRUCTION NOTES:

1. ALL UTILITIES TO BE CONSTRUCTED PRIOR TO THE STREETS.
2. NO VALVES, HYDRANTS, CLEAN-OUTS, ETC. SHALL BE CONSTRUCTED WITHIN CURBS, SIDEWALKS, OR DRIVEWAYS.
3. ALL SEWER PIPE ASTM 3034 (115 PSI)
4. ALL MANHOLES SHALL BE 48" DIAMETER.
5. ALL RING AND COVER SHALL BE 32" DIAMETER.
6. EXISTING MANHOLES, RIM AND FLOWLINE ELEVATIONS SURVEYED BY HMT ENGINEERING & SURVEYING DATED 10/03/2019.
7. POINT OF DELIVERY SHALL BE IN ACCORDANCE WITH NBU WATER AND WASTEWATER DESIGN CRITERIA MANUAL, SECTION 2.3.0.
8. CONDO LOT LINES ARE SHOWN FOR REFERENCE ONLY.
9. SERVICE LINES LEADING TO A MAIN AT DEPTH 8'-0" OR MORE NEED TO FOLLOW THE DEEP SERVICE CONNECTION DETAIL, DRAWING NO. 301 ON SHEET C8.6.

UTILITY TRENCH COMPACTION

ALL UTILITY TRENCH COMPACTION TESTS WITHIN THE STREET PAVEMENT SECTION SHALL BE THE RESPONSIBILITY OF THE DEVELOPER'S GEO-TECHNICAL ENGINEER. FILL MATERIAL SHALL BE PLACED IN UNIFORM LAYERS NOT TO EXCEED TWELVE INCHES (12") LOOSE. EACH LAYER OF MATERIAL SHALL BE COMPACTED TO A MINIMUM 95% DENSITY AND TESTED FOR DENSITY AND MOISTURE IN ACCORDANCE WITH TEST METHODS TEX-113-E, TEX-114-E, TEX-115-E. THE NUMBER AND LOCATION OF REQUIRED TESTS SHALL BE DETERMINED BY THE GEOTECHNICAL ENGINEER AND APPROVED BY THE CITY OF NEW BRAUNFELS STREET INSPECTOR. AT A MINIMUM, TESTS SHALL BE TAKEN EVERY 100LF FOR EACH LIFT. UPON COMPLETION OF TESTING THE GEO-TECHNICAL ENGINEER SHALL PROVIDE THE CITY OF NEW BRAUNFELS STREET INSPECTOR WITH ALL TESTING DOCUMENTATION AND A CERTIFICATION STATING THAT THE PLACEMENT OF FILL MATERIAL HAS BEEN COMPLETED IN ACCORDANCE WITH THE PLANS.

WW LN B
0+00 – 9+00

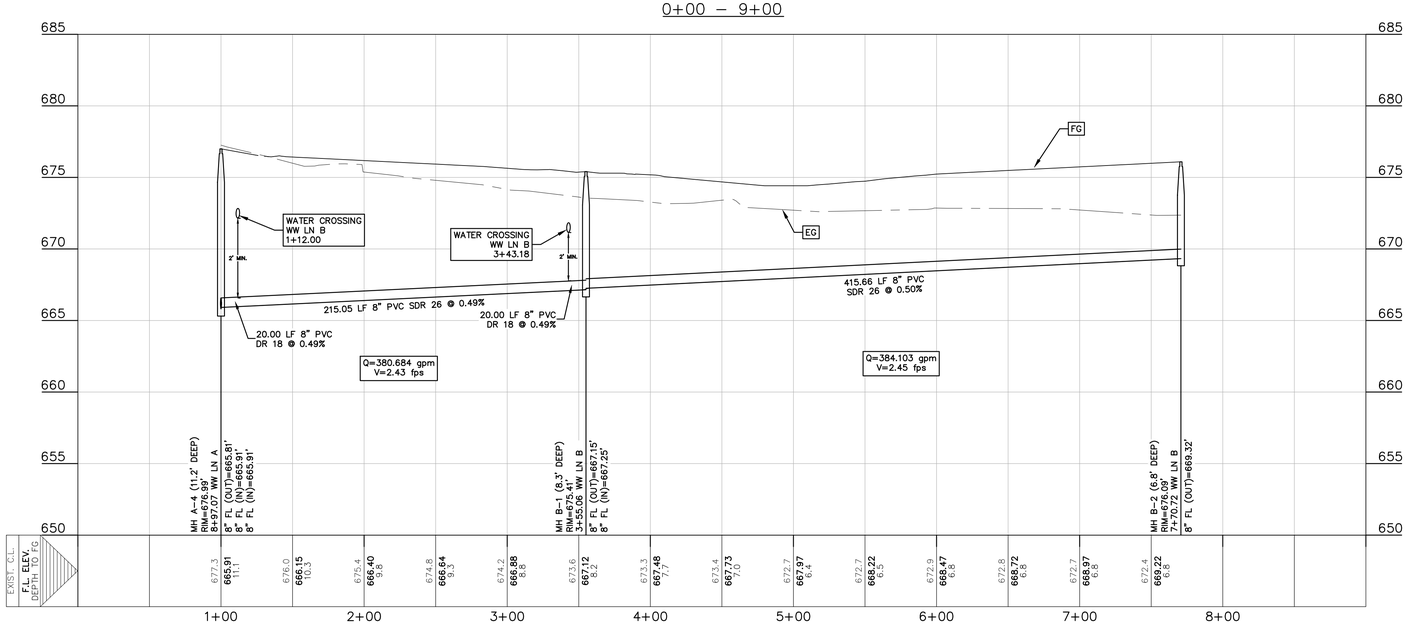

VILLAGE AT GRUENE ONSITE SEWER COMPONENTS LIST	
LUE COUNT = 89	
COUNT	PART
2,307 LF	8" SDR 26 PVC MAIN
80 LF	8" DR 18 PVC MAIN
10	MANHOLES
89	SERVICE LINES & CLEANOUT

* OVERALL WASTEWATER LAYOUT IS REFERENCED AS C8.4 OF CH2019-1890 CONSTRUCTION DOCUMENTS

REFER TO THE COVER SHEET FOR BENCHMARK INFORMATION.

THE LOCATION OF ALL EXISTING UNDERGROUND UTILITIES ARE SHOWN IN APPROXIMATE LOCATIONS ONLY. THE CONTRACTOR SHALL DETERMINE THE EXACT LOCATION OF ALL EXISTING UTILITIES BEFORE COMMENCING WORK. THE CONTRACTOR WILL AGREE TO BE FULLY RESPONSIBLE FOR ANY AND ALL DAMAGES WHICH MIGHT BE INCURRED BY THEIR FAILURE TO EXACTLY LOCATE AND PRESERVE ANY AND ALL UNDERGROUND UTILITIES, STRUCTURES OR FACILITIES. CONTRACTOR SHALL NOTIFY ENGINEER OF ANY DISCREPANCIES 24-HOURS PRIOR TO COMMENCING CONSTRUCTION.

HMT ENGINEERING & SURVEYING
290 S. CASTELL AVE., STE. 100
NEW BRAUNFELS, TX 78130
TBPE FIRM F-10961
TBPLS FIRM 10536000

THIS DOCUMENT IS RELEASED FOR THE PURPOSE OF INTERIM REVIEW UNDER THE AUTHORITY OF CHRISTOPHER P. VAN HEERDE P.E. # 93047 ON 6/3/20. IT IS NOT TO BE USED FOR CONSTRUCTION, BIDDING OR PERMIT PURPOSES.

WASTEWATER LINE B PLAN AND PROFILE

VILLAGE AT GRUENE CONDOMINIUMS

NO.	REVISION DESCRIPTION	REVISION DATE

DATE: JUNE 2020
DRAWN BY: LB
DESIGNED BY: HC
REVIEWED BY: SWH-CVH
HMT PROJECT NO.: 170.004

SHEET
C8.4 PI

Drawing Name: N:_Projects\170 - James Jophek\170.004 - Villages at Gruene Garden Homes\Cds\City Permit\170.004_WWTR.dwg User: robertb Jun 03, 2020 - 5:03pm

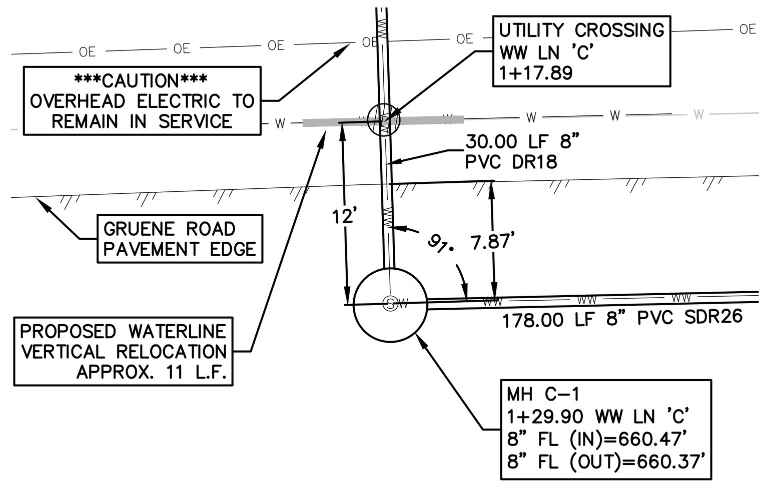

1 MANHOLE C-1 INSET DETAIL
SCALE: Horz. 1:10

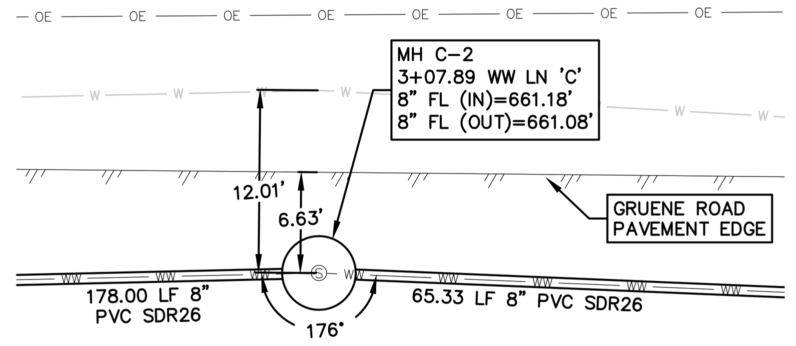

1 MANHOLE C-2 INSET DETAIL
SCALE: Horz. 1:10

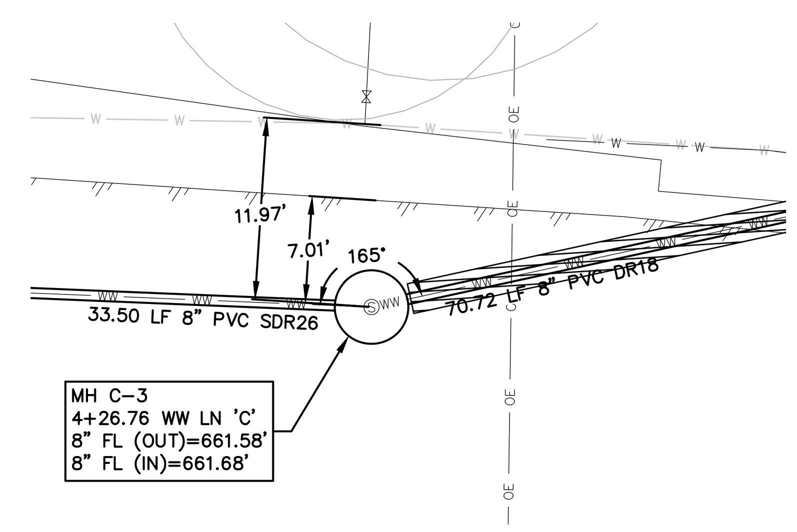

1 MANHOLE C-3 INSET DETAIL
SCALE: Horz. 1:10

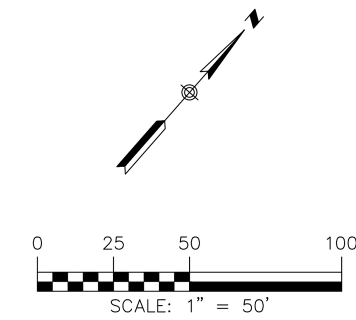

CONSTRUCTION NOTES:

1. NO VALVES, HYDRANTS, ETC. SHALL BE CONSTRUCTED WITHIN CURBS, SIDEWALKS, OR DRIVEWAYS.
2. ALL SEWER PIPE SDR 26 CLASS 160 PSI PRESSURE PIPE UNLESS NOTED OTHERWISE.
3. THIS PROJECT INCLUDES UTILITY INSTALLATIONS GREATER THAN 5 FT. IN DEPTH LOCATED IN PUBLIC RIGHT-OF-WAY OR EASEMENTS. DEEP TRENCHES POSE COMPACTION TESTING AND CONSTRUCTION CHALLENGES AND THE CITY METHODS FOR TESTING AND COMPACTION MAY NOT BE ACHIEVABLE. A UTILITY COMPACTION PLAN WILL BE REQUIRED AND MUST BE SUBMITTED FOR APPROVAL TO CITY PRIOR TO UTILITY INSTALLATION.

LEGEND

Symbol	Description
700	EXISTING CONTOURS
700	PROPOSED CONTOURS
B.L.	BUILDING SETBACK LINE
U.E.	UTILITY EASEMENT
D.E.	DRAINAGE EASEMENT
	EXISTING WASTEWATER LINE
	PROPOSED WASTEWATER LINE
	UTILITY CROSSING
	PROPERTY LINE
	EXISTING FIRE HYDRANT
›	DIRECTIONAL FLOW ARROWS
	50' WASTEWATER ENVELOPE
OE	EXISTING OVERHEAD ELECTRIC
	ENCASEMENT OPERATION

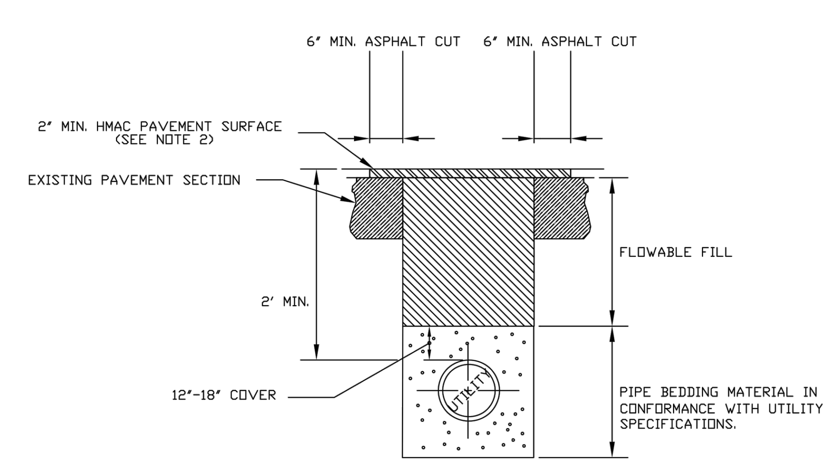

NOTES:

1. THE EXISTING PAVING SURFACE SHALL BE SAW CUT IN A STRAIGHT LINE AT A MINIMUM OF 12"WIDER THAN UNDISTURBED SIDES OF THE TRENCH SYMMETRICAL ABOUT THE CENTERLINE OF THE EXCAVATION.
2. REPLACEMENT HMAC SURFACE LAYER SHALL BE OF THE TYPE AND THICKNESS BASED ON FUNCTIONAL CLASSIFICATION.
   A) MIN. 2"HMAC TYPE "D"FOR TRENCH REPAIRS IN LOCAL/RESIDENTIAL STREETS.
   B) MIN. 3"HMAC TYPE "C"FOR TRENCH REPAIRS IN COLLECTOR/ARTERIAL STREETS.
3. DAMAGED PAVEMENT OUTSIDE THE TRENCH CUT SHALL BE REMOVED AND REPLACED
4. PRIME AND TACK COAT ALL EXPOSED EDGES AND SURFACES.
5. HOT LAY BLACK BASE LAYED IN 8"LIFTS @ 95% COMPACTION.
6. IF EXCAVATION AREA IS OPEN FOR TEMPORARY PUBLIC USE. THE SURFACE SHALL BE MAINTAINED LEVEL WITH ADJACENT RIDING SURFACE WITH COLD MIX AC OR TEMPORARY HMAC.
7. CALICHE OR EXISTING MATERIAL SHALL NOT BE USED TO BACKFILL THE UTILITY EXCAVATION.

TRENCH REPAIR DETAIL FLOWABLE FILL		CITY OF NEW BRAUNFELS ENGINEERING DIVISION 424 S. CASTELL AVE. NEW BRAUNFELS, TEXAS 78130 PHONE: 830 221 4020 FAX: 830 626 3600
ISSUE DATE: APRIL 2015	SCALE: N.T.S	
DRAWN BY: AMF	CONTACT: GF	

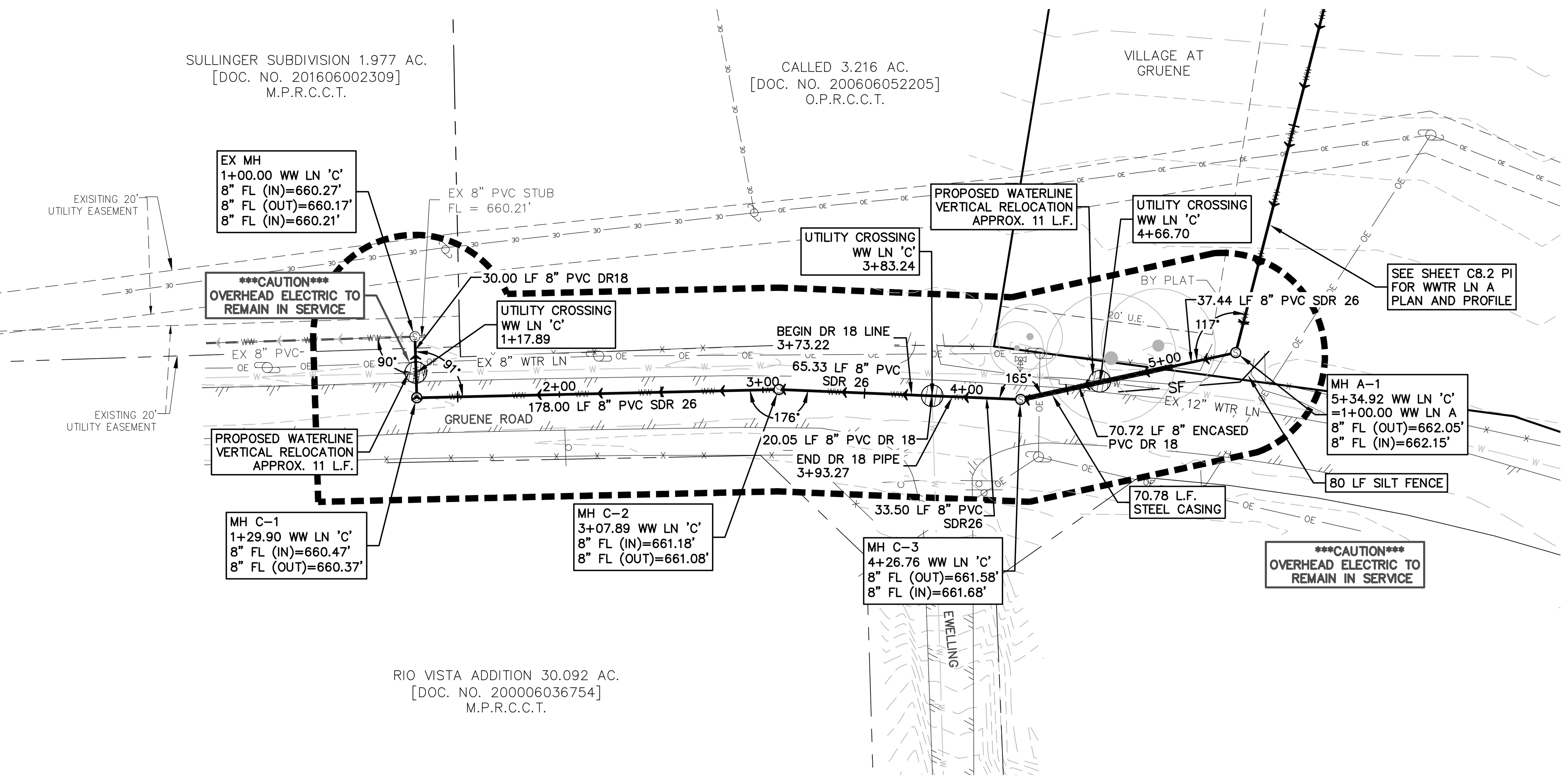

TAKEN FROM TEXAS ADMINISTRATIVE CODE, TITLE 30, PART 1, CHAPTER 217, SUBCHAPTERC, RULE 217.53
"TEXAS COMMISION OF ENVIRONMENTAL QUALITY DESIGN CRITERIA FOR DOMESTIC WASTEWATER SYSTEMS"

(4) If a collection system pipe is located above a water supply pipe and runs parallel to the water supply pipe, each portion of the collection system pipe within nine feet of the water supply pipe must be encased. The casing pipe must be constructed of at least 150 per square inch (psi) pressure class pipe that:

(A) encases the entire length of collection system pipe that is within nine feet of the water supply pipe;

(B) is sealed at both ends with cement grout or a manufactured seal;

(C) is at least two nominal sizes larger than the wastewater collection pipe; and

(D) is supported by spacers between the collection system pipe and the encasing pipe at a maximum of five-foot intervals.

* OFFSITE WASTEWATER LAYOUT IS REFERENCED AS C8.5 OF CH2019-1890 CONSTRUCTION DOCUMENTS

VILLAGE AT GRUENE OFFSITE SEWER COMPONENTS LIST	
COUNT	PART
315 LF	8" SDR 26 PVC MAIN
121 LF	8" DR 18 PVC MAIN
4	MANHOLES
33 LF	WATER MAIN RELOCATION

MANHOLE A-1 COUNTED AS PART OF ONSITE SEWER COMPONENTS LIST (SEE SHEET C8.1). ON CP2019-1890 SET

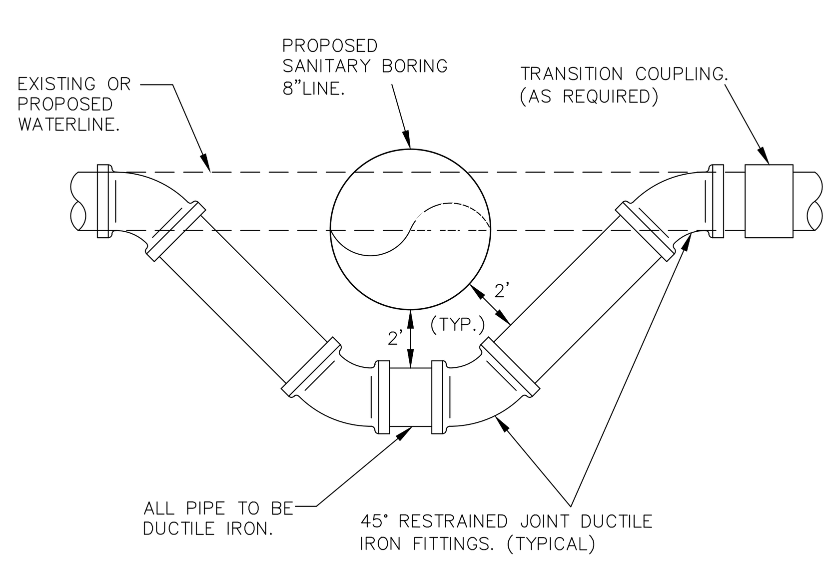

WATERLINE ADJUSTMENT DETAIL
N.T.S

WW LN 'C'

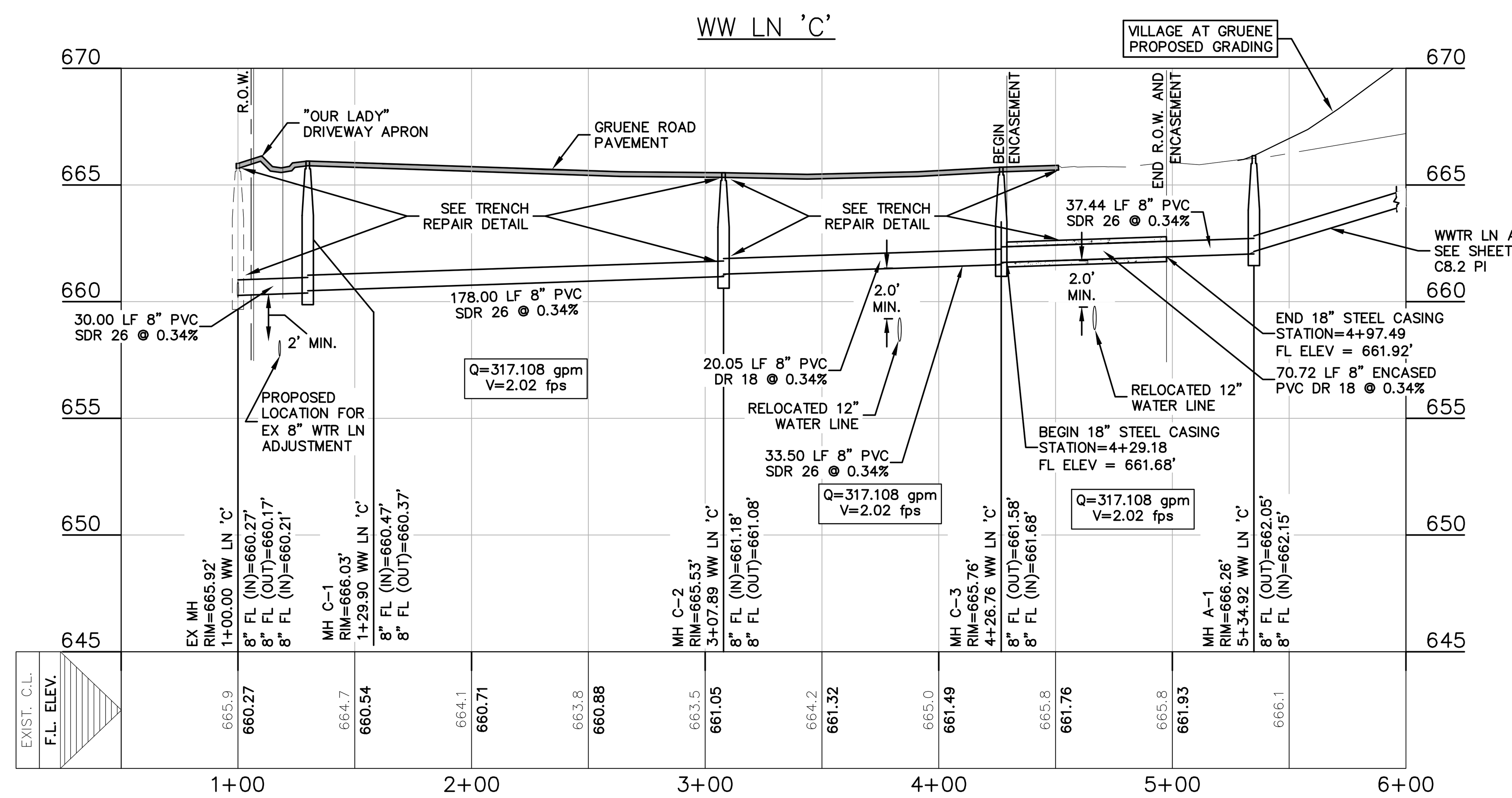

REFER TO THE COVER SHEET
FOR BENCHMARK INFORMATION.

THE LOCATION OF ALL EXISTING UNDERGROUND UTILITIES ARE SHOWN IN APPROXIMATE LOCATIONS ONLY. THE CONTRACTOR SHALL DETERMINE THE EXACT LOCATION OF ALL EXISTING UTILITIES BEFORE COMMENCING WORK. THE CONTRACTOR WILL AGREE TO BE FULLY RESPONSIBLE FOR ANY AND ALL DAMAGES WHICH MIGHT BE INCURRED BY THEIR FAILURE TO EXACTLY LOCATE AND PRESERVE ANY AND ALL UNDERGROUND UTILITIES, STRUCTURES OR FACILITIES. CONTRACTOR SHALL NOTIFY ENGINEER OF ANY DISCREPANCIES 24-HOURS PRIOR TO COMMENCING CONSTRUCTION.

UTILITY TRENCH COMPACTION

ALL UTILITY TRENCH COMPACTION TESTS WITHIN THE STREET PAVEMENT SECTION SHALL BE THE RESPONSIBILITY OF THE DEVELOPER'S GEO-TECHNICAL ENGINEER. FILL MATERIAL SHALL BE PLACED IN UNIFORM LAYERS NOT TO EXCEED TWELVE INCHES (12") LOOSE. EACH LAYER OF MATERIAL SHALL BE COMPACTED TO A MINIMUM 95% DENSITY AND TESTED FOR DENSITY AND MOISTURE IN ACCORDANCE WITH TEST METHODS TEX-113-E, TEX-114-E, TEX-115-E. THE NUMBER AND LOCATION OF REQUIRED TESTS SHALL BE DETERMINED BY THE GEOTECHNICAL ENGINEER AND APPROVED BY THE CITY OF NEW BRAUNFELS STREET INSPECTOR. AT A MINIMUM, TESTS SHALL BE TAKEN EVERY 100LF FOR EACH LIFT. UPON COMPLETION OF TESTING THE GEO-TECHNICAL ENGINEER SHALL PROVIDE THE CITY OF NEW BRAUNFELS STREET INSPECTOR WITH ALL TESTING DOCUMENTATION AND A CERTIFICATION STATING THAT THE PLACEMENT OF FILL MATERIAL HAS BEEN COMPLETED IN ACCORDANCE WITH THE PLANS.

290 S. CASTELL AVE., STE. 100
NEW BRAUNFELS, TX 78130
TBPE FIRM F-10961
TBPLS FIRM 1053600
HMT
ENGINEERING & SURVEYING

THIS DOCUMENT IS RELEASED FOR THE PURPOSE OF INTERIM REVIEW UNDER THE AUTHORITY OF CHRISTOPHER P. VAN HEERDE P.E. # 93047 ON 6/3/20. IT IS NOT TO BE USED FOR CONSTRUCTION, BIDDING OR PERMIT PURPOSES.
Chris Van Heerde, P.E.

OFFSITE WW PLAN AND PROFILE

VILLAGE AT GRUENE CONDOMINIUMS

NO.	REVISION DESCRIPTION	REVISION DATE

DATE: APRIL 2020
DRAWN BY: LB
DESIGNED BY: HC
REVIEWED BY: SWH-CVH
HMT PROJECT NO.: 170.004

SHEET
C8.5 PI

Drawing Name: N:_Projects\170 - James Japhet\170.004 - Villages at Gruene Garden Homes\CDs\City Permit\072.006.102_WWTR.dwg User: robertb Jun 03, 2020 - 5:03pm

NOTE:
DEEP SERVICE CONNECTION DETAIL FOR ALL SERVICE CONNECTIONS DEEPER THAN 8'-0".

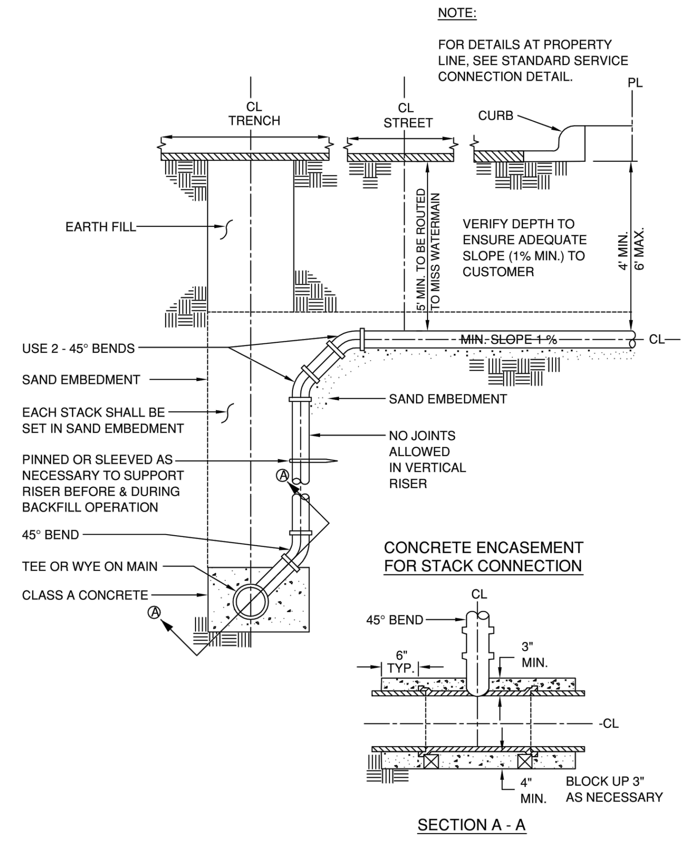

NEW BRAUNFELS UTILITIES WATER SYSTEMS ENGINEERING | DRAWN BY: JD Amaro | APPROVED BY: | STANDARD DRAWING: **WASTEWATER DEEP SERVICE CONNECTION DETAIL** | UPDATED: 4-15-03 | SCALE: N.T.S. | SHEET: 1 OF 1 | DRAWING NO. 301

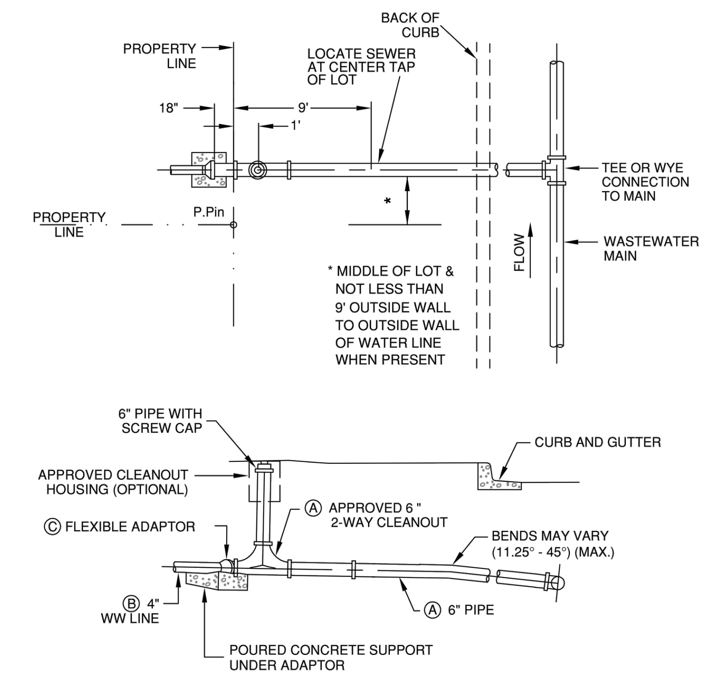

NOTES:

Ⓐ TO BE INSTALLED AND INSPECTED DURING SUBDIVISION CONSTRUCTION.
Ⓑ BUILDING INSPECTION DEPARTMENT SHALL INSPECT CUSTOMER'S WASTEWATER LINE, EXCEPT CONNECTION AT TAP.
Ⓒ OUTSIDE CITY, NBU SEWER DEPARTMENT SHALL INSPECT CONNECTION AT TAP.

NEW BRAUNFELS UTILITIES WATER SYSTEMS ENGINEERING | DRAWN BY: H Shadrock | APPROVED BY: | STANDARD DRAWING: **SINGLE WASTEWATER SERVICE CONNECTION DETAIL** | UPDATED: 4-28-03 | SCALE: N.T.S. | SHEET: 1 OF 2 | DRAWING NO. 302

NOTES:

1. UTILITY CONTRACTOR, DURING SUBDIVISION CONSTRUCTION, INSTALLS WASTEWATER CONNECTION TO MAIN, 6" STUB WITH 6" SERVICE BRANCH WITH 2-WAY CLEANOUT AND RISER FOR CLEANOUTS (CAPPED) AND PLUGS FOR 2-WAY CLEANOUTS AT PROPERTY LINE END. ALL WASTEWATER PIPING SHALL HAVE ELASTOMERIC GASKET TYPE JOINTS AND SHALL SLOPE DOWNWARD TO MAIN 2%, 1/4 " PER FOOT, MINIMUM TO 45° MAXIMUM. DEPTH OF SERVICE STUB AT PROPERTY LINE WILL BE SHOWN ON PLANS BY ENGINEER OR DESIGNATED REPRESENTATIVE IF GREATER THAN 4', OTHERWISE, THE INSTALLED DEPTH WILL TYPICALLY BE 4' TO 6'. IF WASTEWATER SERVICE LINE TO MAIN REQUIRES DEFLECTION EXCEEDING 45°, REFER TO DETAIL DRAWING 301. ALL INSTALLATIONS SHALL BE MADE IN ACCORDANCE WITH INFORMATION SHOWN ON APPLICABLE STANDARD DRAWINGS AND WILL BE INSPECTED BY NEW BRAUNFELS UTILITIES (NBU) CONSTRUCTION INSPECTION PERSONNEL.
2. CUSTOMERS REMOVE PLUGS FROM 2-WAY CLEANOUT, AT PROPERTY LINE, INSTALL MINIMUM 18" LENGTH OF 6" PIPE, INSTALL 4" WASTEWATER LINES [EXTEND 4" PIPE 6" MINIMUM INTO 6" PIPE AND JOINT WITH FLEXIBLE ADAPTOR] AND CAST IN PLACE CONCRETE SUPPORT BLOCK UNDER THE FLEXIBLE ADAPTOR. BLOCK SHALL HAVE MINIMUM DIMENSIONS OF 6" THICK AND 18" WIDE AND EXTEND A MINIMUM OF 6" BEYOND EITHER END OF ADAPTOR. IF WASTEWATER WILL NOT SATISFACTORILY FLOW BY GRAVITY TO SEWER MAIN ADJACENT TO PROPERTY, PUMP EQUIPMENT MUST BE PROVIDED BY THE CUSTOMER AS PART OF CUSTOMER'S WASTEWATER SYSTEM.
3. CUSTOMER IS RESPONSIBLE FOR PIPING SYSTEM UNTIL WASTEWATER IS CONNECTED. ANY MISSING OR DAMAGED PARTS SHALL BE REINSTALLED BY CUSTOMER WHO SHALL GUARANTEE, FOR A PERIOD OF ONE (1) YEAR FROM DATE OF ACCEPTANCE, THAT CONNECTIONS TO NBU SYSTEMS ARE FREE FROM DEFECTS IN WORKMANSHIP OR MATERIALS. CUSTOMER ALSO HAS THE RESPONSIBILITY TO ASSURE THAT 2-WAY CLEANOUTS REMAIN CLEAR OF SIDEWALKS AND OTHER OBSTRUCTIONS.
4. NEW BRAUNFELS UTILITIES (NBU) ACTIVITY IS LIMITED TO INSPECTION OF CONNECTIONS TO NBU'S WASTEWATER SYSTEM. FOR MAINTENANCE PURPOSES, NBU'S RESPONSIBILITY ENDS AT THE CUSTOMER'S WASTEWATER CONNECTION TO THE 2-WAY CLEANOUT.
5. PIPING IN STREET RIGHT-OF-WAY AND IN EASEMENT AREA SHALL BE BEDDED IN GRANULAR MATERIALS AS REQUIRED BY NBU STANDARD SPECIFICATION; MATERIALS SHALL BE AS SPECIFIED; BACKFILL ABOVE THE GRANULAR BEDDING. SERVICE LINES IN THESE AREAS SHALL HAVE A MINIMUM COVER BELOW FINAL STREET GRADE OF 42"; ANY EXCEPTION MUST BE SPECIFICALLY APPROVED BY THE ENGINEER.

NEW BRAUNFELS UTILITIES WATER SYSTEMS ENGINEERING | DRAWN BY: H Shadrock | APPROVED BY: | STANDARD DRAWING: **SINGLE WASTEWATER SERVICE CONNECTION DETAIL** | UPDATED: 4-28-03 | SCALE: N.T.S. | SHEET: 2 OF 2 | DRAWING NO. 302

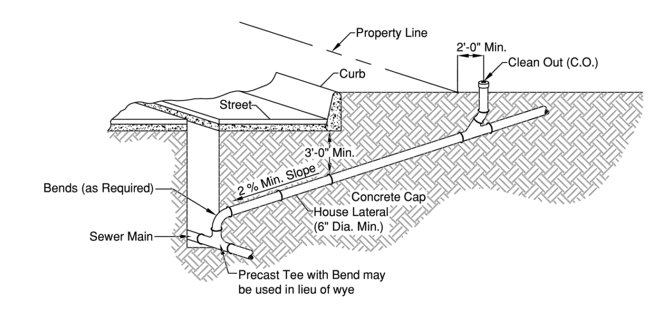

GENERAL NOTES

1. ALL CONSTRUCTION AND MATERIALS SHALL BE IN STRICT CONFORMANCE WITH APPLICABLE PROVISION OF "STANDARD SPECIFICATION FOR PUBLIC WORKS CONSTRUCTION".
2. MANHOLE RINGS AND COVERS SHALL BE TRANS-TEX A77, OR EQUAL, WHEN WATER TIGHT MANHOLE RINGS AND COVERS ARE SPECIFIED, THEY SHALL BE TRANS-77, "0" RING OR APPROVED EQUAL.
3. A. MATERIAL FOR SANITARY SEWER PIPE MUST BE THE SAME FROM MANHOLE TO MANHOLE. CHANGES IN TYPE OF PIPE MAY BE MADE. ONLY AT MANHOLES, OR SPECIAL STRUCTURES, EXCEPT AS APPROVED BY THE NBU PROJECT ENGINEER.
   B. ADAPTERS AND CONCRETE COLLARS SHALL BE USED AS DIRECTED BY THE ENGINEER AND AS APPROVED BY THE NBU PROJECT ENGINEER.
4. ALL SEWER PIPE WITH LESS THAN THREE FEET (3'-0") OF COVER SHALL BE CONC. ENCASED, AS PER ITEM NO. 407.
5. ALL FORCE MAINS SHALL BE PROVIDED WITH THRUST BLOCKS. WHERE CHANGES IN DIRECTION OCCUR, AT TEES, BENDS, CROSSES, CHANGES IN SIZE, STOPS (DEAD ENDS). VALVES AND /OR AS SHOWN BELOW, OR AS DIRECTED BY THE ENGINEER.
6. ALL CONCRETE USED FOR THRUST BLOCKING SHALL HAVE A MINIMUM CONCRETE STRENGTH OF 3500 PSI.
7. ALL MANDRELS MUST BE APPROVED BY NBU CONSTRUCTION INSPECTIONS AND STAMPED BEFORE USE.
8. REFER DRAWINGS TO THE "NEW BRAUNFELS WATER SYSTEMS STANDARD DRAWINGS FOR SANITARY SEWER CONSTRUCTION."

NOTES:

1. MATERIALS FOR SANITARY SEWER LATERAL SHALL CONFORM TO THE CITY OF NEW BRAUNFELS STANDARD SPECIFICATIONS FOR PRIVATE SEWAGE FACILITIES. ALL FLEXIBLE PIPE SHALL CONFORM TO A MINIMUM OF ASTM DESIGNATION D-3034 (SDR-35 OR BETTER) WITH COMPRESSION JOINT GASKETS OR SHALL BE SOLVENT JOINT.
2. A. IF THE PROPERTY IS ON THE EDWARDS RECHARGE ZONE, TCEQ REQUIRES THAT A REGISTERED PROFESSIONAL ENGINEER, REGISTERED SANITARIAN, OR APPROPRIATE CITY INSPECTOR INSPECT AND CERTIFY THE SERVICE LATERAL PRIOR TO COVERING IN ACCORDANCE WITH 31 TAC SS331.4 (B) (9). ALTER OF CERTIFICATION MUST BE SENT TO THE TCEQ NEW BRAUNFELS OFFICE.
   B. IF THE PROPERTY IS INSIDE NEW BRAUNFELS CITY LIMITS, A PERMIT IS REQUIRED FROM THE CITY OF NEW BRAUNFELS BUILDING AND ZONING PLUMBING SECTION (XXX-XXXX).
   C. IF THE PROPERTY IS OUTSIDE NEW BRAUNFELS CITY LIMITS AND OVER THE EDWARDS RECHARGE ZONE, A PERMIT IS REQUIRED FROM THE NEW BRAUNFELS WATER SYSTEM (830 629-8417).

HOUSE LATERAL DETAIL
NOT TO SCALE

NEW BRAUNFELS UTILITIES WATER SYSTEMS ENGINEERING | DRAWN BY: JD Amaro | APPROVED BY: | STANDARD DRAWING: **HOUSE LATERAL DETAIL** | UPDATED: 5-6-03 | SCALE: N.T.S. | SHEET: 1 OF 1 | DRAWING NO. 303

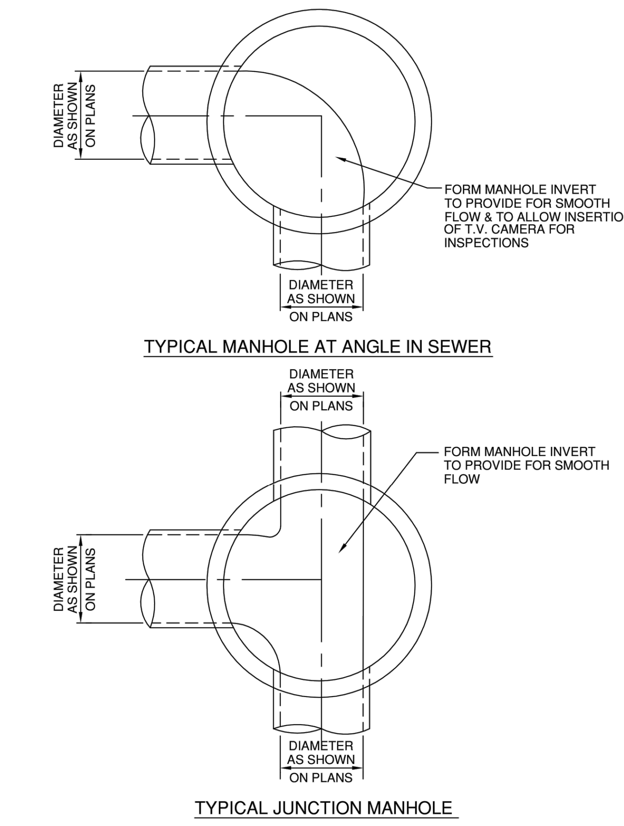

NEW BRAUNFELS UTILITIES WATER SYSTEMS ENGINEERING | DRAWN BY: JD Amaro | APPROVED BY: | STANDARD DRAWING: **MANHOLE INVERT PLAN** | UPDATED: 4-16-03 | SCALE: N.T.S. | SHEET: 1 OF 2 | DRAWING NO. 320

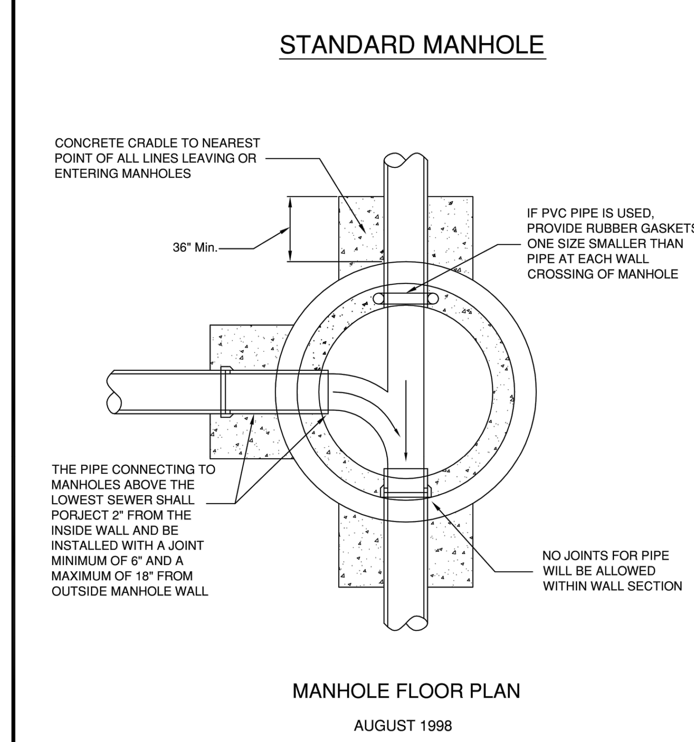

NEW BRAUNFELS UTILITIES WATER SYSTEMS ENGINEERING | DRAWN BY: H Shadrock | APPROVED BY: | STANDARD DRAWING: **STANDARD MANHOLE MANHOLE FLOOR PLAN** | UPDATED: 5-5-03 | SCALE: N.T.S. | SHEET: 2 OF 2 | DRAWING NO. 320

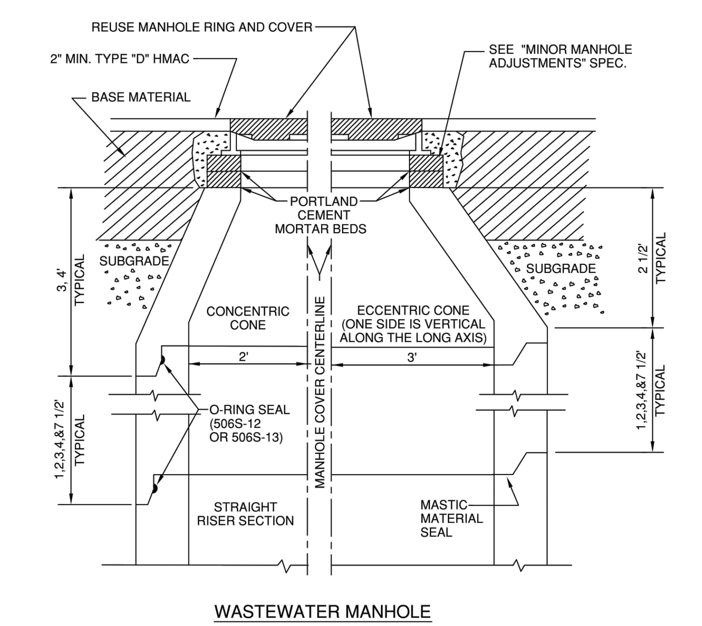

1. MANHOLE SECTIONS TEMPORARILY REMOVED FOR ROADWAY CONSTRUCTION MAY BE REUSED ONLY WITH THE WRITTEN APPROVAL OF THE INSPECTOR. O-RINGS SHALL NOT BE REUSED.
2. ANY COMBINATION OF REMOVING THE CONCRETE RINGS, AND / OR THE MANHOLE CONE, AND/OR THE STRAIGHT RISER SECTION OF THE MANHOLE SHALL BE ACCEPTABLE TO TEMPORARILY LOWER THE MANHOLE GRADE FOR ROADWAY RECONSTRUCTION.
3. WHILE THE MANHOLE IS TEMPORARILY LOWERED, A SHEET OF STEEL SUITABLE TO SUPPORT ALL IMPOSED LOADS SHALL BE USED TO COVER THE OPENING. THE STEEL PLATE SHALL BE SET IN MORTAR TO PREVENT LEAKAGE.
4. SUBGRADE AND BASE MATERIALS SHALL BE COMPACTED TO 95% AND 100% DENSITIES, RESPECTIVELY, COMPACTION SHALL BE BY MECHANICAL TAMPING TO THE DENSITIES SPECIFIED.
5. MANHOLE SHALL BE SET SO RING AND COVER MATCH STREET SLOPE.

NEW BRAUNFELS UTILITIES WATER SYSTEMS ENGINEERING | DRAWN BY: JD Amaro | APPROVED BY: | STANDARD DRAWING: **MAJOR MANHOLE ADJUSTMENT** | UPDATED: 4-16-03 | SCALE: N.T.S. | SHEET: 1 OF 1 | DRAWING NO. 321

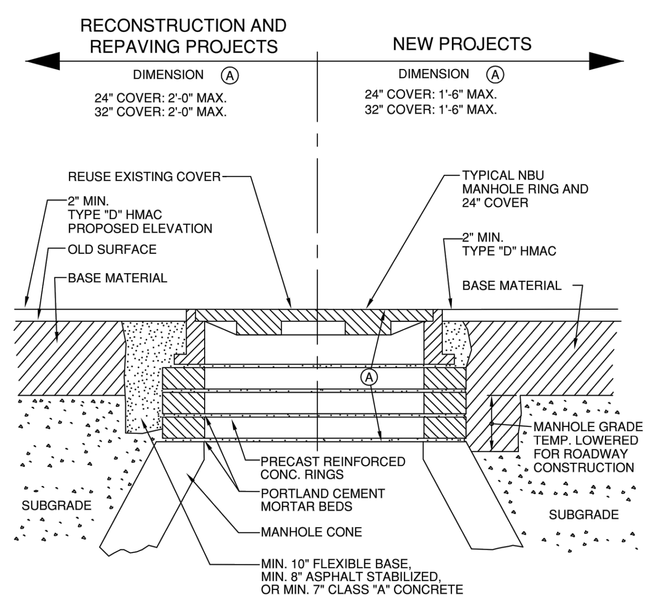

NOTES:

1. MORTAR BEDS SHALL NOT EXCEED 1".
2. SUBGRADE AND BASE MATERIALS SHALL BE COMPACTED ACCORDING TO STANDARD SPECIFICATIONS.

NEW BRAUNFELS UTILITIES WATER SYSTEMS ENGINEERING | DRAWN BY: JD Amaro | APPROVED BY: | STANDARD DRAWING: **NEW MANHOLE CONSTRUCTION AND MINOR MANHOLE ADJUSTMENT** | UPDATED: 4-16-03 | SCALE: N.T.S. | SHEET: 1 OF 1 | DRAWING NO. 322

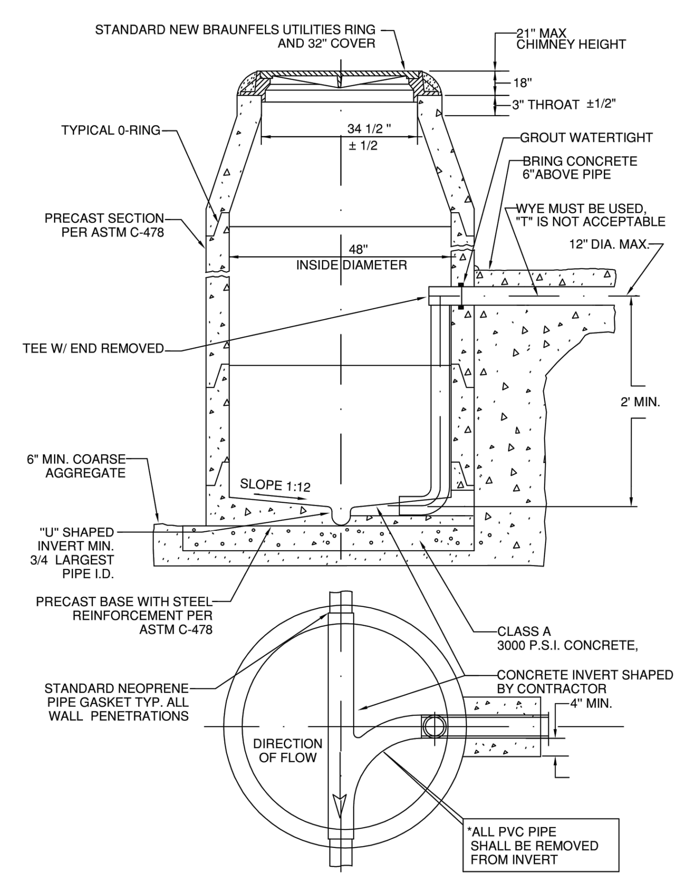

NEW BRAUNFELS UTILITIES WATER SYSTEMS ENGINEERING | DRAWN BY: JD Amaro | APPROVED BY: | STANDARD DRAWING: **PRECAST MANHOLE WITH INSIDE DROP INLET ON PRECAST BASE** | UPDATED: 4-16-03 | SCALE: N.T.S. | SHEET: 1 OF 1 | DRAWING NO. 326

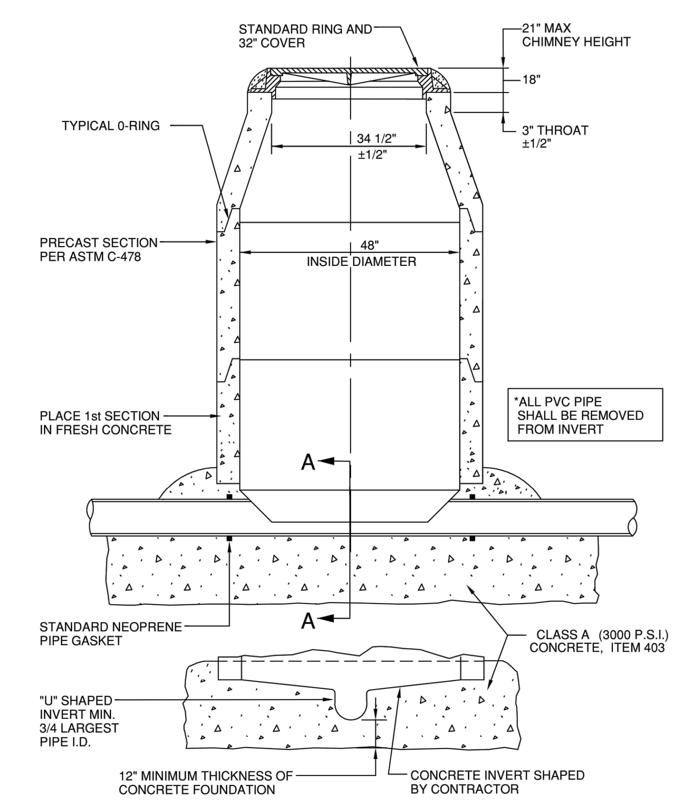

NEW BRAUNFELS UTILITIES WATER SYSTEMS ENGINEERING | DRAWN BY: JD Amaro | APPROVED BY: | STANDARD DRAWING: **PRECAST MANHOLE ON CAST IN PLACE FOUNDATION** | UPDATED: 4-16-03 | SCALE: N.T.S. | SHEET: 1 OF 1 | DRAWING NO. 327

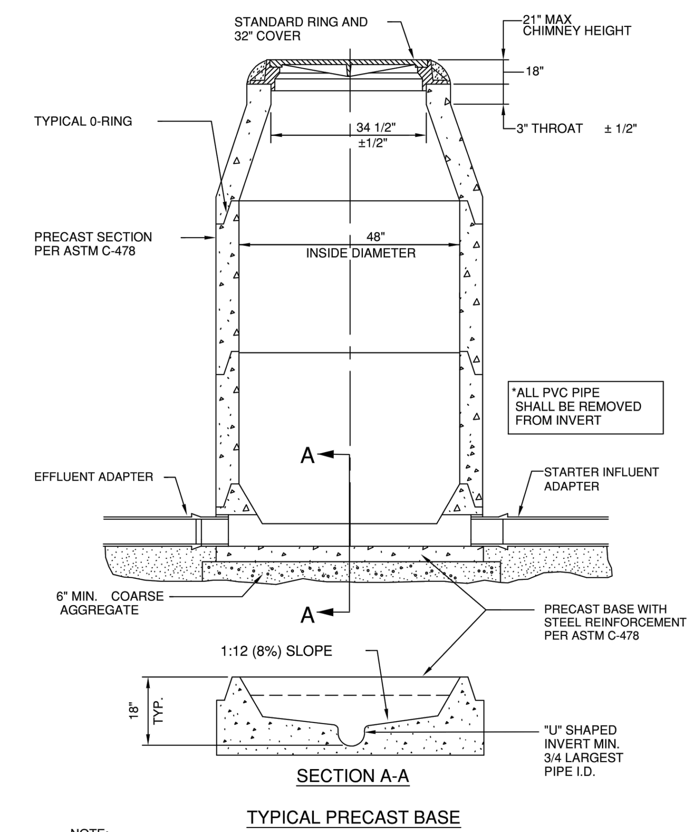

NOTE:
THE MANHOLE BASE SHALL BE BEDDED ON 6" COARSE AGGREGATE. THE CONTRACTOR SHALL LEVEL AND PLUMB THE BASE PRIOR TO SETTING THE PRECAST MANHOLE RISER SECTIONS ON THE PRECAST CONCRETE BASE.

NEW BRAUNFELS UTILITIES WATER SYSTEMS ENGINEERING | DRAWN BY: H Shadrock | APPROVED BY: | STANDARD DRAWING: **WASTEWATER MANHOLE ON PRECAST BASE** | UPDATED: 4-24-03 | SCALE: N.T.S. | SHEET: 1 OF 1 | DRAWING NO. 328

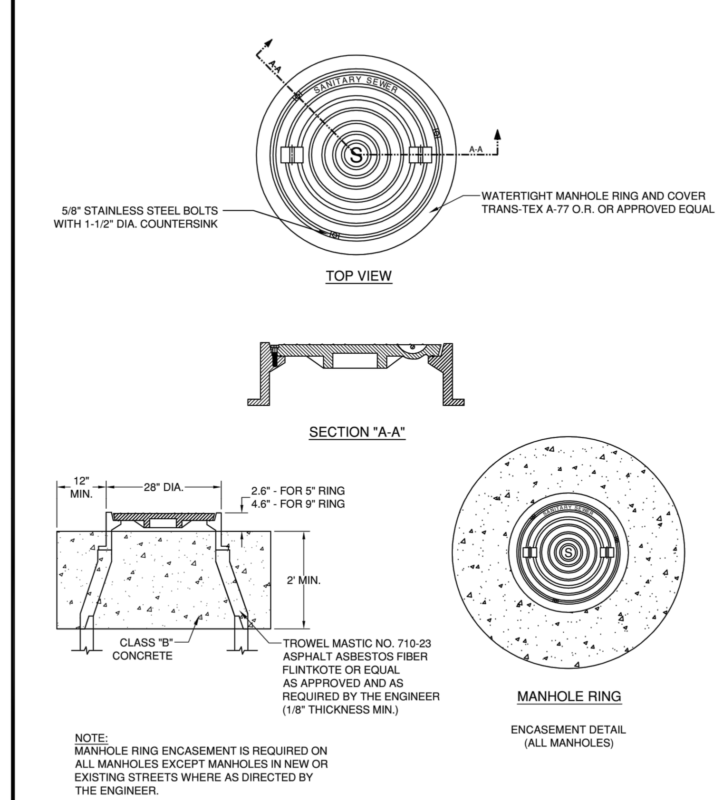

NOTE:
MANHOLE RING ENCASEMENT IS REQUIRED ON ALL MANHOLES EXCEPT MANHOLES IN NEW OR EXISTING STREETS WHERE AS DIRECTED BY THE ENGINEER.

NEW BRAUNFELS UTILITIES WATER SYSTEMS ENGINEERING | DRAWN BY: H Shadrock | APPROVED BY: | STANDARD DRAWING: **MANHOLE RING & ENCASEMENT DETAIL** | UPDATED: 5-6-03 | SCALE: N.T.S. | SHEET: 1 OF 2 | DRAWING NO. 329

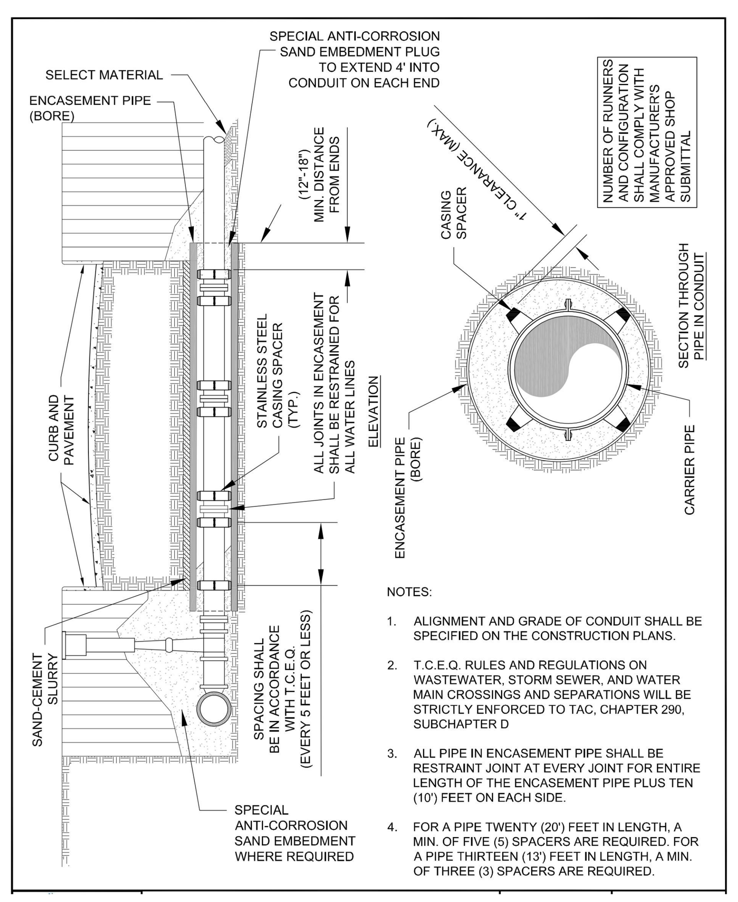

NOTES:

1. ALIGNMENT AND GRADE OF CONDUIT SHALL BE SPECIFIED ON THE CONSTRUCTION PLANS.
2. T.C.E.Q. RULES AND REGULATIONS ON WASTEWATER, STORM SEWER, AND WATER MAIN CROSSINGS AND SEPARATIONS WILL BE STRICTLY ENFORCED TO TAC, CHAPTER 290, SUBCHAPTER D
3. ALL PIPE IN ENCASEMENT PIPE SHALL BE RESTRAINT JOINT AT EVERY JOINT FOR ENTIRE LENGTH OF THE ENCASEMENT PIPE PLUS TEN (10') FEET ON EACH SIDE.
4. FOR A PIPE TWENTY (20') FEET IN LENGTH, A MIN. OF FIVE (5) SPACERS ARE REQUIRED. FOR A PIPE THIRTEEN (13') FEET IN LENGTH, A MIN. OF THREE (3) SPACERS ARE REQUIRED.

CONCRETE ENCASEMENT DETAIL

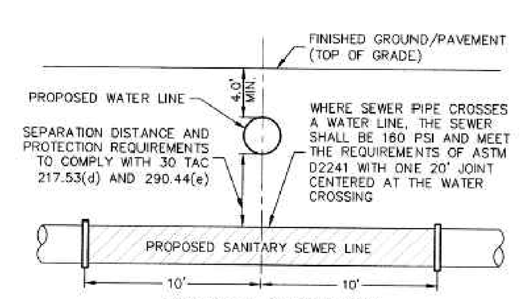

TYPICAL SANITARY SEWER/WATER CROSSING DETAIL
NOT-TO-SCALE

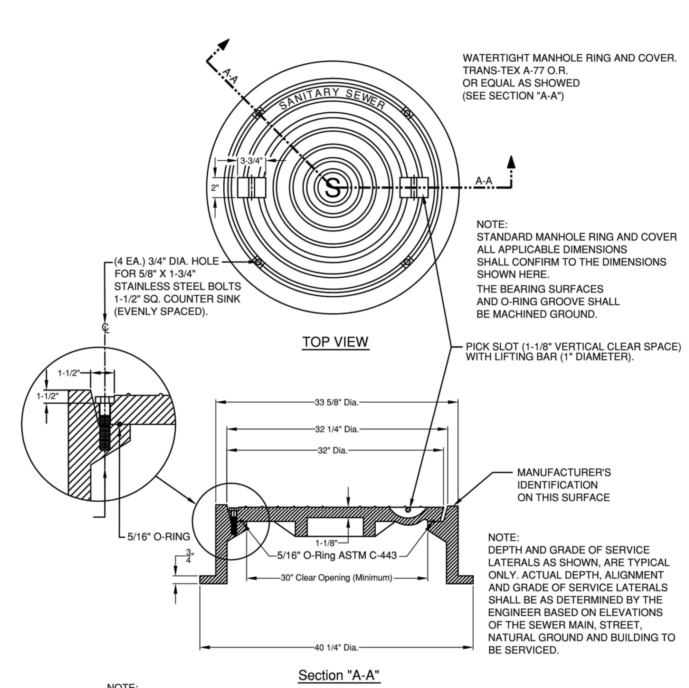

NOTE:
ALL DIMENSIONS MAY VARY EXCEPT THE DIAMETER OF THE LID, AND THE DIAMETER OF THE CENTER LINE OF THE BOLT HOLES, AND THE MINIMUM DIAMETER OF THE CLEAR OPENING. THE COMBINED WEIGHT OF THE MANHOLE RING AND COVER MUST BE AT LEAST 400 LBS.

MANHOLE RING & COVER DETAIL

NEW BRAUNFELS UTILITIES WATER SYSTEMS ENGINEERING | DRAWN BY: JD Amaro | APPROVED BY: | STANDARD DRAWING: **MANHOLE RING & ENCASEMENT DETAIL** | UPDATED: 12-6-10 | SCALE: N.T.S. | SHEET: 2 OF 2 | DRAWING NO. 329

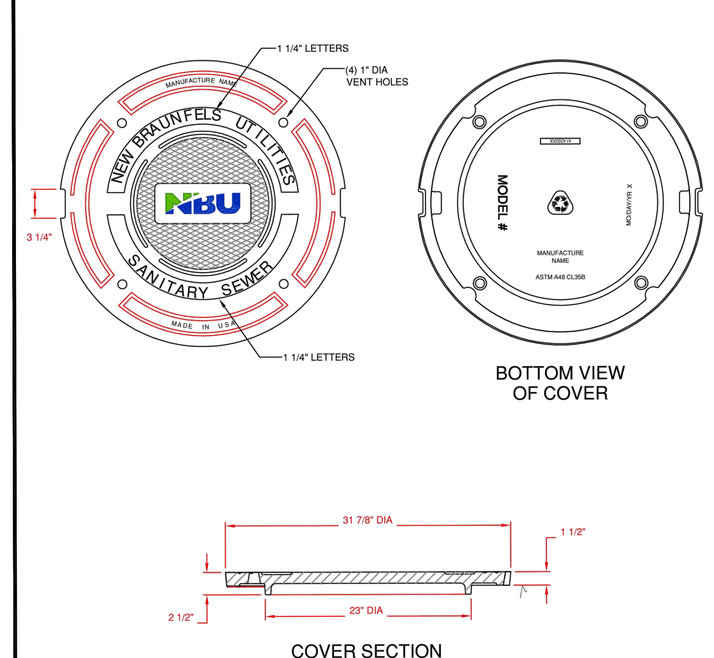

COVER SPECIFICATIONS:
1. EST. WEIGHT - 275 LBS
2. GRAY IRON
3. ASTM A48 CL35B

√ MACHINED SURFACE

NEW BRAUNFELS UTILITIES WATER SYSTEMS ENGINEERING | DRAWN BY: H Shadrock | APPROVED BY: | STANDARD DRAWING: **SANITARY SEWER MANHOLE - 31 7/8 " COVER** | UPDATED: 4-30-03 | SCALE: N.T.S. | SHEET: 1 OF 1 | DRAWING NO. 331

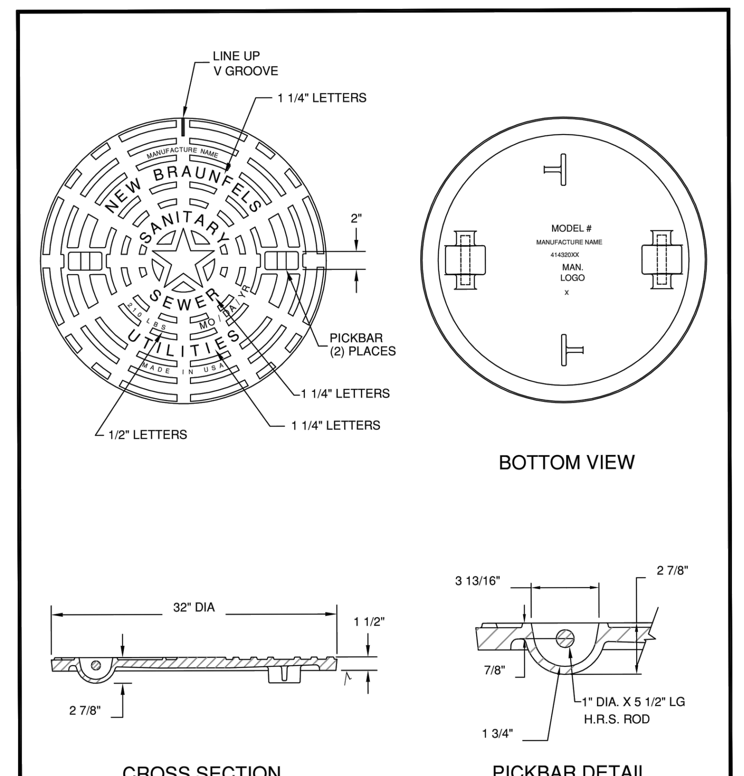

COVER SPECIFATIONS:
1. EST. WEIGHT - 210 LBS
2. GRAY IRON
3. ASTM A48 CL35

√ MACHINED SURFACE

NEW BRAUNFELS UTILITIES WATER SYSTEMS ENGINEERING | DRAWN BY: H Shadrock | APPROVED BY: | STANDARD DRAWING: **SANITARY SEWER MANHOLE - 32" COVER** | UPDATED: 4-30-03 | SCALE: N.T.S. | SHEET: 1 OF 1 | DRAWING NO. 332

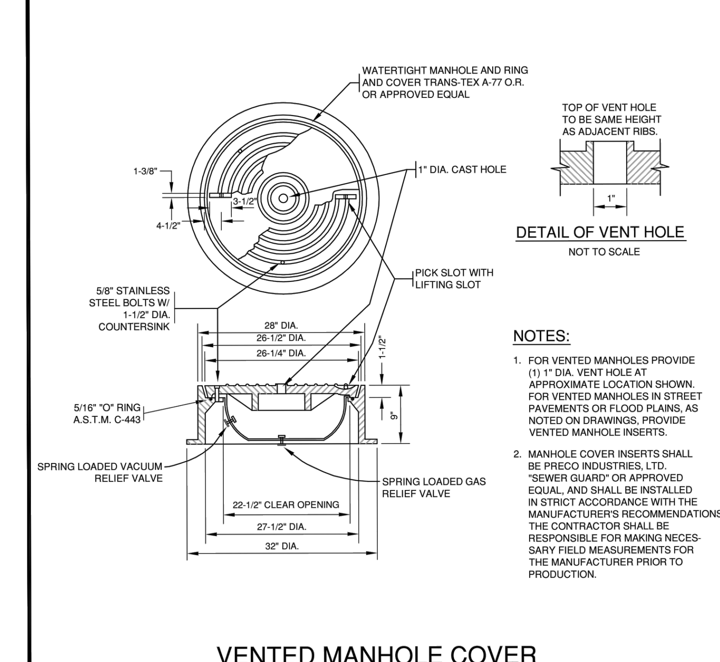

NOTES:

1. FOR VENTED MANHOLES PROVIDE (1) 1" DIA. VENT HOLE AT APPROXIMATE LOCATION SHOWN. FOR VENTED MANHOLES IN STREET PAVEMENTS OR FLOOD PLAINS, AS NOTED ON DRAWINGS, PROVIDE VENTED MANHOLE INSERTS.
2. MANHOLE COVER INSERTS SHALL BE PRECO INDUSTRIES, LTD. "SEWER GUARD" OR APPROVED EQUAL, AND SHALL BE INSTALLED IN STRICT ACCORDANCE WITH THE MANUFACTURER'S RECOMMENDATIONS. THE CONTRACTOR SHALL BE RESPONSIBLE FOR MAKING NECESSARY FIELD MEASUREMENTS FOR THE MANUFACTURER PRIOR TO PRODUCTION.

VENTED MANHOLE COVER

NEW BRAUNFELS UTILITIES WATER SYSTEMS ENGINEERING | DRAWN BY: H Shadrock | APPROVED BY: | STANDARD DRAWING: **VENTED MANHOLE COVER** | UPDATED: 5-6-03 | SCALE: N.T.S. | SHEET: 1 OF 1 | DRAWING NO. 334

290 S. CASTELL AVE., STE. 100
NEW BRAUNFELS, TX 78130
TBPE FIRM F-10961
TBPLS FIRM 1053600

HMT ENGINEERING & SURVEYING

THIS DOCUMENT IS RELEASED FOR THE PURPOSE OF INTERIM REVIEW UNDER THE AUTHORITY OF CHRISTOPHER P. VAN HEERDE P.E. # 93047 ON 6/3/20. IT IS NOT TO BE USED FOR CONSTRUCTION, BIDDING OR PERMIT PURPOSES.

Chris Van Heerde, P.E.

WASTEWATER DETAILS (1 OF 2)

VILLAGE AT GRUENE CONDOMINIUMS

NO.	REVISION DESCRIPTION	REVISION DATE

DATE: APRIL 2020
DRAWN BY: LB
DESIGNED BY: HC
REVIEWED BY: SWH–CVH
HMT PROJECT NO.: 170.004

SHEET
C8.6 PI

Drawing Name: N:_Projects\170 – James Japhet\170.004 – Villages at Gruene Garden Homes\CDs\City Permit\170.004_DETL.dwg User: robertb Jun 03, 2020 – 5:04pm

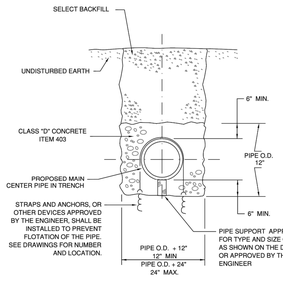

NBU NEW BRAUNFELS UTILITIES WATER SYSTEMS ENGINEERING

DRAWN BY: JO Amaro | APPROVED BY: | STANDARD DRAWING: **CONCRETE ENCASEMENT**

UPDATED: 4-16-03 | SCALE: N.T.S. | SHEET: 1 OF 1 | DRAWING NO.: 310

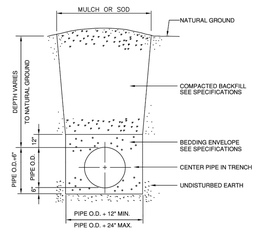

NBU NEW BRAUNFELS UTILITIES WATER SYSTEMS ENGINEERING

DRAWN BY: H Shadrock | APPROVED BY: | STANDARD DRAWING: **TYPICAL TRENCH WITH UNFINISHED SURFACE**

UPDATED: 4-30-03 | SCALE: N.T.S. | SHEET: 1 OF 1 | DRAWING NO.: 422

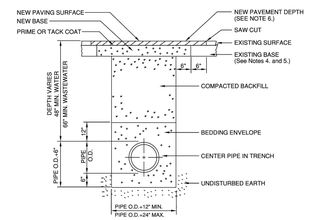

NOTES:

1. THE EXISTING PAVING SURFACE SHALL BE SAW CUT IN A STRAIGHT LINE A MINIMUM OF 12" WIDER THAN THE UNDISTURBED SIDES OF THE TRENCH, SYMMETRICAL ABOUT THE CENTER LINE OF THE EXCAVATION.
2. ANY CONCRETE PAVING SHALL BE SAW CUT 6" WIDER THAN UNDISTURBED SIDES OF EXCAVATION.
3. IF EXCAVATION AREA IS OPEN FOR TEMPORARY PUBLIC USE THE SURFACE SHALL BE MAINTAINED LEVEL WITH ADJACENT RIDING SURFACE WITH COLD MIX OR TEMPORARY HOT MIX.
4. ROAD BASE AND SURFACE MATERIALS IN THE TRENCH CUT SHALL BE REPLACED IN KIND OF EQUAL THICKNESS, OR MINIMUM BASE THICKNESS OF 10 INCHES, WHICHEVER IS GREATER.
5. ALL DAMAGED AREAS OF PAVEMENT OUTSIDE THE TRENCH CUT SHALL BE REMOVED AND REPLACED WITH MINIMUM OF 8 INCHES OF BASE OR MATCH EXISTING, WHICHEVER IS GREATER.
6. SURFACE PAVEMENT SHALL BE OF THE KIND AND THICKNESS AS EXISTING, OR MINIMUM 2 INCHES, WHICHEVER IS GREATER.

NBU NEW BRAUNFELS UTILITIES WATER SYSTEMS ENGINEERING

DRAWN BY: JO Amaro | APPROVED BY: | STANDARD DRAWING: **TYPICAL TRENCH WITH PAVED SURFACE**

UPDATED: 4-16-03 | SCALE: N.T.S. | SHEET: 1 OF 1 | DRAWING NO.: 430

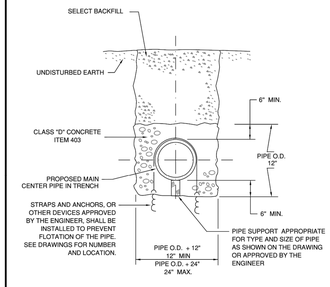

NBU NEW BRAUNFELS UTILITIES WATER SYSTEMS ENGINEERING

DRAWN BY: JO Amaro | APPROVED BY: | STANDARD DRAWING: **CONCRETE ENCASEMENT**

UPDATED: 4-16-03 | SCALE: N.T.S. | SHEET: 1 OF 1 | DRAWING NO.: 310

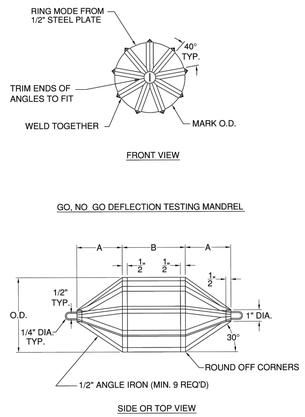

NBU NEW BRAUNFELS UTILITIES WATER SYSTEMS ENGINEERING

DRAWN BY: JO Amaro | APPROVED BY: | STANDARD DRAWING: **GO, NO GO DEFLECTION TESTING MANDREL**

UPDATED: 5-8-03 | SCALE: N.T.S. | SHEET: 1 OF 1 | DRAWING NO.: 350

HMT ENGINEERING & SURVEYING
290 S. CASTELL AVE., STE. 100
NEW BRAUNFELS, TX 78130
TBPE FIRM F-10961
TBPLS FIRM 10536000

THIS DOCUMENT IS RELEASED FOR THE PURPOSE OF INTERIM REVIEW UNDER THE AUTHORITY OF CHRISTOPHER P. VAN HEERDE P.E. # 93047 ON 6/3/20. IT IS NOT TO BE USED FOR CONSTRUCTION, BIDDING OR PERMIT PURPOSES.

WASTEWATER DETAILS (2 OF 2)

VILLAGE AT GRUENE CONDOMINIUMS

NO.	REVISION DESCRIPTION	REVISION DATE

DATE: APRIL 2020

DRAWN BY: LB

DESIGNED BY: HC

REVIEWED BY: SWH–CVH

HMT PROJECT NO.: 170.004

SHEET

C8.7 PI

Drawing Name: N:_Projects\170 - James Japhet\170.004 - Villages at Gruene Garden Homes\CDs\City Permit\170.004_DETL.dwg User: robertb Jun 03, 2020 - 5:04pm

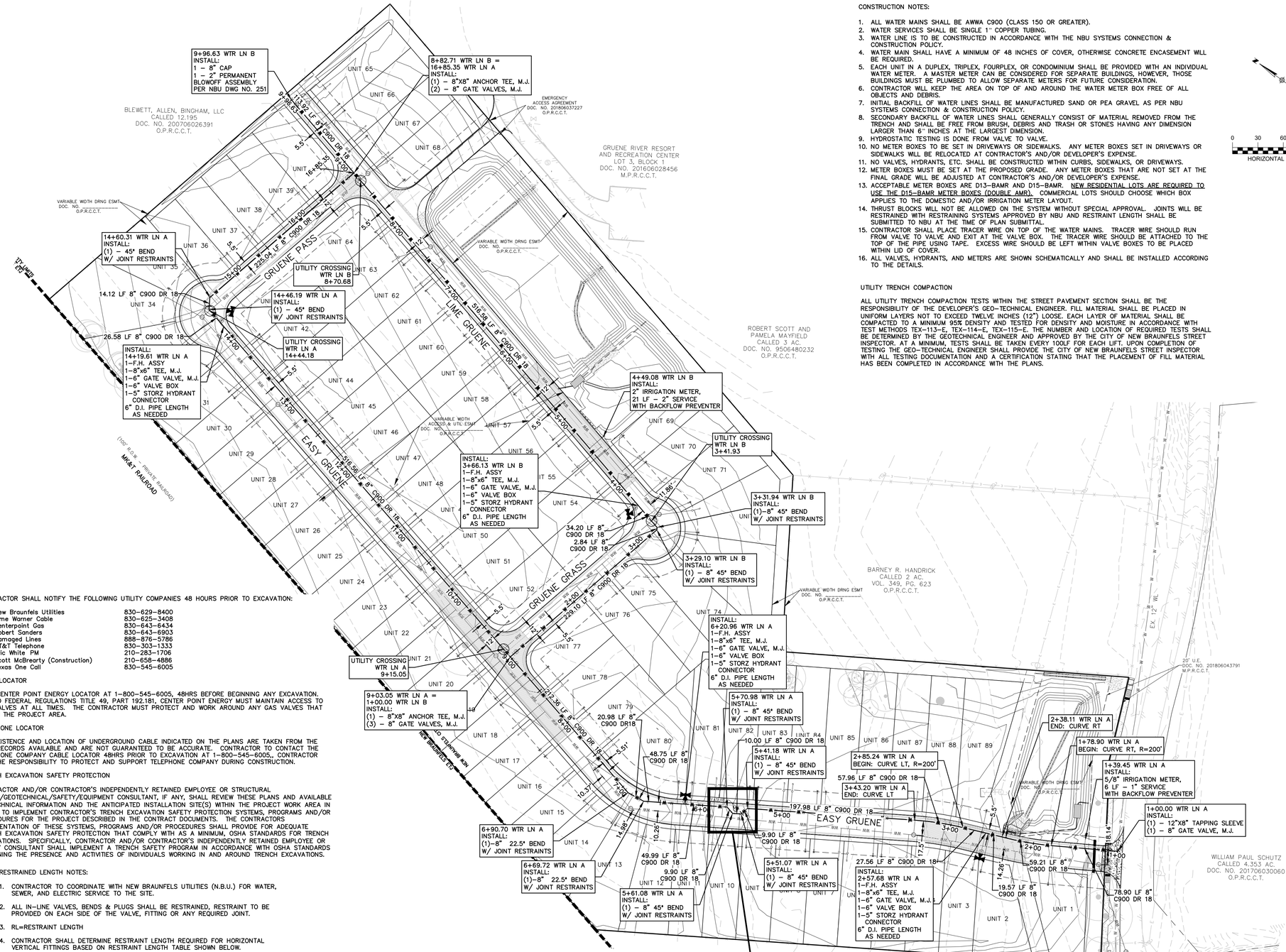

INSET
1"=20'

CONTRACTOR SHALL NOTIFY THE FOLLOWING UTILITY COMPANIES 48 HOURS PRIOR TO EXCAVATION:

New Braunfels Utilities	830–629–8400
Time Warner Cable	830–625–3408
Centerpoint Gas	830–643–6434
Robert Sanders	830–643–5903
Damaged Lines	888–876–5786
AT&T Telephone	830–303–1333
Eric White PM	210–283–1706
Scott McBrearty (Construction)	210–658–4886
Texas One Call	830–545–6005

C.P.E. LOCATOR

CALL CENTER POINT ENERGY LOCATOR AT 1–800–545–6005, 48HRS BEFORE BEGINNING ANY EXCAVATION. DUE TO FEDERAL REGULATIONS TITLE 49, PART 192.181, CENTER POINT ENERGY MUST MAINTAIN ACCESS TO GAS VALVES AT ALL TIMES. THE CONTRACTOR MUST PROTECT AND WORK AROUND ANY GAS VALVES THAT ARE IN THE PROJECT AREA.

TELEPHONE LOCATOR

THE EXISTENCE AND LOCATION OF UNDERGROUND CABLE INDICATED ON THE PLANS ARE TAKEN FROM THE BEST RECORDS AVAILABLE AND ARE NOT GUARANTEED TO BE ACCURATE. CONTRACTOR TO CONTACT THE TELEPHONE COMPANY CABLE LOCATOR 48HRS PRIOR TO EXCAVATION AT 1–800–545–6005,, CONTRACTOR HAS THE RESPONSIBILITY TO PROTECT AND SUPPORT TELEPHONE COMPANY DURING CONSTRUCTION.

TRENCH EXCAVATION SAFETY PROTECTION

CONTRACTOR AND/OR CONTRACTOR'S INDEPENDENTLY RETAINED EMPLOYEE OR STRUCTURAL DESIGN/GEOTECHNICAL/SAFETY/EQUIPMENT CONSULTANT, IF ANY, SHALL REVIEW THESE PLANS AND AVAILABLE GEOTECHNICAL INFORMATION AND THE ANTICIPATED INSTALLATION SITE(S) WITHIN THE PROJECT WORK AREA IN ORDER TO IMPLEMENT CONTRACTOR'S TRENCH EXCAVATION SAFETY PROTECTION SYSTEMS, PROGRAMS AND/OR PROCEDURES FOR THE PROJECT DESCRIBED IN THE CONTRACT DOCUMENTS. THE CONTRACTORS IMPLEMENTATION OF THESE SYSTEMS, PROGRAMS AND/OR PROCEDURES SHALL PROVIDE FOR ADEQUATE TRENCH EXCAVATION SAFETY PROTECTION THAT COMPLY WITH AS A MINIMUM, OSHA STANDARDS FOR TRENCH EXCAVATIONS. SPECIFICALLY, CONTRACTOR AND/OR CONTRACTOR'S INDEPENDENTLY RETAINED EMPLOYEE OR SAFETY CONSULTANT SHALL IMPLEMENT A TRENCH SAFETY PROGRAM IN ACCORDANCE WITH OSHA STANDARDS GOVERNING THE PRESENCE AND ACTIVITIES OF INDIVIDUALS WORKING IN AND AROUND TRENCH EXCAVATIONS.

RESTRAINED LENGTH NOTES:

1. CONTRACTOR TO COORDINATE WITH NEW BRAUNFELS UTILITIES (N.B.U.) FOR WATER, SEWER, AND ELECTRIC SERVICE TO THE SITE.
2. ALL IN–LINE VALVES, BENDS & PLUGS SHALL BE RESTRAINED, RESTRAINT TO BE PROVIDED ON EACH SIDE OF THE VALVE, FITTING OR ANY REQUIRED JOINT.
3. RL=RESTRAINT LENGTH
4. CONTRACTOR SHALL DETERMINE RESTRAINT LENGTH REQUIRED FOR HORIZONTAL VERTICAL FITTINGS BASED ON RESTRAINT LENGTH TABLE SHOWN BELOW.

RESTRAINED LENGTH FOR PIPE

PIPE INSIDE DIAMETER	MATERIAL	HORIZONTAL BENDS				VERTICAL BENDS						DEAD END/ INCLINE VALVES
						UPPER			LOWER			
		90°	45°	22.5°	11.25°	45°	22.5°	11.25°	45°	22.5°	11.25°	
8"	PVC	29	13	6	3	34	16	8	8	4	2	80
8"	DUCTILE IRON	25	10	5	3	22	11	6	8	4	2	52
12"	PVC	41	17	9	4	47	23	12	13	6	3	114

TEE

PIPE INSIDE DIAMETER OF RUN	PIPE INSIDE DIAMETER OF BRANCH	MATERIAL	FT.
8"	8"	PVC	70
8"	8"	DUCTILE IRON	45
12"	8"	PVC	64

NOTES:

LENGTHS SHOWN ABOVE WERE COMPUTED BASED ON THE FOLLOWING VALUES:

1) SAFETY FACTOR = 1.5 TO 1
2) TEST PRESSURE = 200psi.
3) SOIL DESIGNATION = MANUFACTURED SAND
4) DEPTH OF COVER = 3.5 FEET (TYPICAL AND UPPER BEND)
5) DEPTH OF COVER = 5 FEET (LOWER BEND)
6) LENGTH ALONG RUN = 2 FEET

CONSTRUCTION NOTES:

1. ALL WATER MAINS SHALL BE AWWA C900 (CLASS 150 OR GREATER).
2. WATER SERVICES SHALL BE SINGLE 1" COPPER TUBING.
3. WATER LINE IS TO BE CONSTRUCTED IN ACCORDANCE WITH THE NBU SYSTEMS CONNECTION & CONSTRUCTION POLICY.
4. WATER MAIN SHALL HAVE A MINIMUM OF 48 INCHES OF COVER, OTHERWISE CONCRETE ENCASEMENT WILL BE REQUIRED.
5. EACH UNIT IN A DUPLEX, TRIPLEX, FOURPLEX, OR CONDOMINIUM SHALL BE PROVIDED WITH AN INDIVIDUAL WATER METER. A MASTER METER CAN BE CONSIDERED FOR SEPARATE BUILDINGS, HOWEVER, THOSE BUILDINGS MUST BE PLUMBED TO ALLOW SEPARATE METERS FOR FUTURE CONSIDERATION.
6. CONTRACTOR WILL KEEP THE AREA ON TOP OF AND AROUND THE WATER METER BOX FREE OF ALL OBJECTS AND DEBRIS.
7. INITIAL BACKFILL OF WATER LINES SHALL BE MANUFACTURED SAND OR PEA GRAVEL AS PER NBU SYSTEMS CONNECTION & CONSTRUCTION POLICY.
8. SECONDARY BACKFILL OF WATER LINES SHALL GENERALLY CONSIST OF MATERIAL REMOVED FROM THE TRENCH AND SHALL BE FREE FROM BRUSH, DEBRIS AND TRASH OR STONES HAVING ANY DIMENSION LARGER THAN 6" INCHES AT THE LARGEST DIMENSION.
9. HYDROSTATIC TESTING IS DONE FROM VALVE TO VALVE.
10. NO METER BOXES TO BE SET IN DRIVEWAYS OR SIDEWALKS. ANY METER BOXES SET IN DRIVEWAYS OR SIDEWALKS WILL BE RELOCATED AT CONTRACTOR'S AND/OR DEVELOPER'S EXPENSE.
11. NO VALVES, HYDRANTS, ETC. SHALL BE CONSTRUCTED WITHIN CURBS, SIDEWALKS, OR DRIVEWAYS.
12. METER BOXES MUST BE SET AT THE PROPOSED GRADE. ANY METER BOXES THAT ARE NOT SET AT THE FINAL GRADE WILL BE ADJUSTED AT CONTRACTOR'S AND/OR DEVELOPER'S EXPENSE.
13. ACCEPTABLE METER BOXES ARE D13–BAMR AND D15–BAMR. NEW RESIDENTIAL LOTS ARE REQUIRED TO USE THE D15–BAMR METER BOXES (DOUBLE AMR). COMMERCIAL LOTS SHOULD CHOOSE WHICH BOX APPLIES TO THE DOMESTIC AND/OR IRRIGATION METER LAYOUT.
14. THRUST BLOCKS WILL NOT BE ALLOWED ON THE SYSTEM WITHOUT SPECIAL APPROVAL. JOINTS WILL BE RESTRAINED WITH RESTRAINING SYSTEMS APPROVED BY NBU AND RESTRAINT LENGTH SHALL BE SUBMITTED TO NBU AT THE TIME OF PLAN SUBMITTAL.
15. CONTRACTOR SHALL PLACE TRACER WIRE ON TOP OF THE WATER MAINS. TRACER WIRE SHOULD RUN FROM VALVE TO VALVE AND EXIT AT THE VALVE BOX. THE TRACER WIRE SHOULD BE ATTACHED TO THE TOP OF THE PIPE USING TAPE. EXCESS WIRE SHOULD BE LEFT WITHIN VALVE BOXES TO BE PLACED WITHIN LID OF COVER.
16. ALL VALVES, HYDRANTS, AND METERS ARE SHOWN SCHEMATICALLY AND SHALL BE INSTALLED ACCORDING TO THE DETAILS.

UTILITY TRENCH COMPACTION

ALL UTILITY TRENCH COMPACTION TESTS WITHIN THE STREET PAVEMENT SECTION SHALL BE THE RESPONSIBILITY OF THE DEVELOPER'S GEO–TECHNICAL ENGINEER. FILL MATERIAL SHALL BE PLACED IN UNIFORM LAYERS NOT TO EXCEED TWELVE INCHES (12") LOOSE. EACH LAYER OF MATERIAL SHALL BE COMPACTED TO A MINIMUM 95% DENSITY AND TESTED FOR DENSITY AND MOISTURE IN ACCORDANCE WITH TEST METHODS TEX–113–E, TEX–114–E, TEX–115–E. THE NUMBER AND LOCATION OF REQUIRED TESTS SHALL BE DETERMINED BY THE GEOTECHNICAL ENGINEER AND APPROVED BY THE CITY OF NEW BRAUNFELS STREET INSPECTOR. AT A MINIMUM, TESTS SHALL BE TAKEN EVERY 100LF FOR EACH LIFT. UPON COMPLETION OF TESTING THE GEO–TECHNICAL ENGINEER SHALL PROVIDE THE CITY OF NEW BRAUNFELS STREET INSPECTOR WITH ALL TESTING DOCUMENTATION AND A CERTIFICATION STATING THAT THE PLACEMENT OF FILL MATERIAL HAS BEEN COMPLETED IN ACCORDANCE WITH THE PLANS.

HORIZONTAL SCALE: 1:60

LEGEND

700	EXISTING CONTOURS
700	PROPOSED CONTOURS
B.L.	BUILDING SETBACK LINE
U.E.	UTILITY EASEMENT
D.E.	DRAINAGE EASEMENT
	EXISTING WATER LINE
	PROPOSED WATER LINE
	PROPOSED WATER SERVICE
	UTILITY CROSSING

UTILITY NOTES:

1. ALL UTILITIES TO BE CONSTRUCTED PRIOR TO THE STREETS.
2. NO VALVES, HYDRANTS, ETC. SHALL BE CONSTRUCTED WITHIN CURBS, SIDEWALKS OR DRIVEWAYS.
3. THIS SITE IS IN THE DOWNTOWN PRESSURE ZONE ACCORDING TO NEW BRAUNFELS UTILITIES PRESSURE RECORDER LOCATIONS.
4. CONTRACTOR TO VERIFY EXISTING LATERAL HAS A MINIMUM LONGITUDINAL SLOPE OF 2%.
5. POINT OF DELIVERY SHALL BE IN ACCORDANCE WITH NBU WATER AND WASTEWATER DESIGN CRITERIA MANUAL, SECTION 2.3.0.

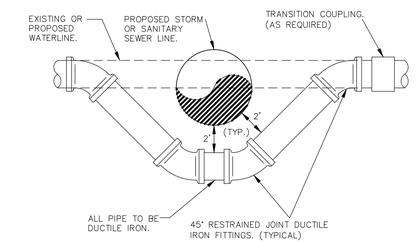

WATERLINE ADJUSTMENT DETAIL
N.T.S

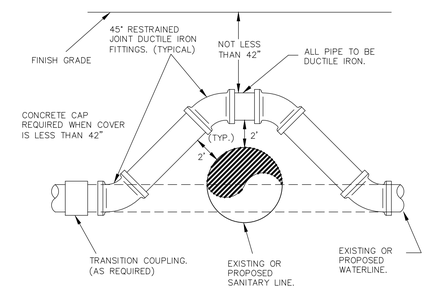

WATERLINE ADJUSTMENT DETAIL
N.T.S

VILLAGE AT GRUENE
WATER COMPONENTS LIST

LUE COUNT = 89

COUNT	PART
2,479 LF	8" C900 PVC DR 18
1	5/8" IRRIGATION METER
89	SERVICE LINES & 5/8" METERS
4	HYDRANT ASSEMBLIES

REFER TO THE COVER SHEET
FOR BENCHMARK INFORMATION.

THE LOCATION OF ALL EXISTING UNDERGROUND UTILITIES ARE SHOWN IN APPROXIMATE LOCATIONS ONLY. THE CONTRACTOR SHALL DETERMINE THE EXACT LOCATION OF ALL EXISTING UTILITIES BEFORE COMMENCING WORK. THE CONTRACTOR WILL AGREE TO BE FULLY RESPONSIBLE FOR ANY AND ALL DAMAGES WHICH MIGHT BE INCURRED BY THEIR FAILURE TO EXACTLY LOCATE AND PRESERVE ANY AND ALL UNDERGROUND UTILITIES, STRUCTURES OR FACILITIES. CONTRACTOR SHALL NOTIFY ENGINEER OF ANY DISCREPANCIES 24–HOURS PRIOR TO COMMENCING CONSTRUCTION.

HMT
ENGINEERING & SURVEYING
290 S. CASTELL AVE., STE. 100
NEW BRAUNFELS, TX 78130
TBPE FIRM F-10961
TBPLS FIRM 10536 00

THIS DOCUMENT IS RELEASED FOR THE PURPOSE OF INTERIM REVIEW UNDER THE AUTHORITY OF CHRISTOPHER P. VAN HEERDE P.E. # 93047 ON 6/3/20. IT IS NOT TO BE USED FOR CONSTRUCTION, BIDDING OR PERMIT PURPOSES.

OVERALL WATER PLAN

VILLAGE AT GRUENE
CONDOMINIUMS

NO.	REVISION DESCRIPTION	REVISION DATE

DATE: APRIL 2020
DRAWN BY: LB
DESIGNED BY: HC
REVIEWED BY: SWH–CVH
HMT PROJECT NO.: 170.004

SHEET
C9.1 PI

Drawing Name: N:_Projects\170 – James Asphalt\170.004 – Villages at Gruene Garden Homes\02a\City Permit\170.004_WATR.dwg User: robertb Jun 03, 2020 – 5:04pm

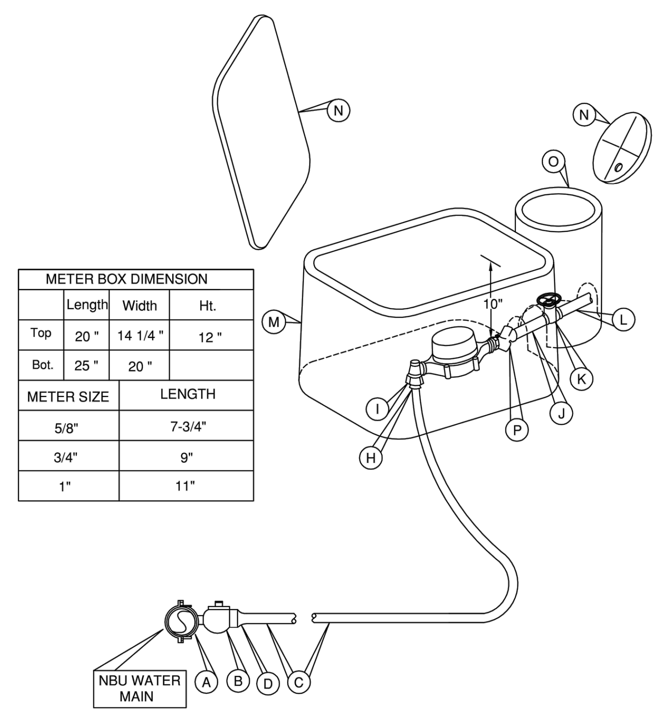

METER BOX DIMENSION			
	Length	Width	Ht.
Top	20 "	14 1/4 "	12 "
Bot.	25 "	20 "	

METER SIZE	LENGTH
5/8"	7-3/4"
3/4"	9"
1"	11"

MATERIAL LIST:

(A) SERVICE CLAMP REQUIRED ON ALL PLASTIC & ASBESTOS CEMENT PIPE AND ON ALL IRON PIPE 12" AND SMALLER.

(B) 1" CORPORATION STOP - SERVICE PIPE OUTLET.

(C) 1" SERVICE PIPE.

(D) 1" COUPLING: SERVICE PIPE TO MALE I.P.T. (COMPRESSION FITTINGS)

NBU — NEW BRAUNFELS UTILITIES WATER SYSTEMS ENGINEERING | DRAWN BY: H Shadrock | APPROVED BY: | STANDARD DRAWING: **STANDARD INSTALLATION DETAIL FOR 5/8", 3/4" & 1" METER** | UPDATED: 4-16-03 | SCALE: N.T.S. | SHEET: 1 OF 2 | DRAWING NO. 202

(H) 1" COUPLING: SERVICE PIPE TO MALE I.P. THREAD, (COMPRESSION FITTING)

(I) 1" ANGLE METER STOP; SERVICE PIPE INLET X SWIVEL COUPLING NUT OUTLET, AND 1" X 3/4" BRASS BUSHING. A 1" X 3/4" METER BUSHING IS REQUIRED AT THE ANGLE STOP FOR ALL 5/8" AND 3/4" METERS.

(J) 12" SCHEDULE 80 PVC THREADED NIPPLE

(K) 1" BRASS GATE VALVES.

(L) 1" PIPE MEETING CITY OF NEW BRAUNFELS PLUMBING CODE REQUIREMENTS.

(M) METER BOX – EAST JORDAN IRON WORKS, MODEL 15P, NBU# 89004000001.

(N) LID

(O) CUSTOMERS' CUT–OFF VALVE BOX (CONCRETE). MAY BE 12" PIECE SDR 26, 6" PVC.

(P) DUAL CHECK BACKFLOW DEVICE – 1" DUAL CHECK CONBRACO, MN 40–3S65A

NOTES:

1. SERVICE PIPE SHALL BE COPPER TUBE SIZE. IT SHALL BE ANNEALED SEAMLESS TYPE "K" COPPER TUBING MEETING THE CURRENT ASTM B88 STANDARD WITH NO SWEAT OR SOLDERED JOINTS.
2. SERVICE SADDLE SHALL BE WRAPPED COMPLETELY WITH 8 MIL POLYETHYLENE FILM.
3. BRANCH CONNECTION AND BOTH ANGLE METER STOPS MUST BE INSTALLED PRIOR TO FIRST METER INSTALLATION EVEN THOUGH SECOND PROPERTY MAY NOT BE READY FOR SERVICE.
4. TOP OF BOXES SHOULD BE 1" ABOVE GROUND OR FLUSH WITH PAVEMENT SURFACE.
5. PIPING AND TUBING IN STREET RIGHT–OF–WAY SHALL BE BEDDED IN GRANULAR MATERIALS AS REQUIRED BY THE SPECIFICATIONS; BACKFILL ABOVE GRANULAR BEDDING AS REQUIRED BY SPECIFICATIONS.
6. BOX CONSISTENTLY SPACED BEHIND CURB WITH A MAXIMUM OF 12" AND/OR SIDEWALK (6" FROM PROPERTY LINE) AND OUT OF VEHICULAR TRAFFIC AREA.
7. ANGLE STOP PLACED A MAXIMUM OF 4" FROM BACK OF BOX THAT FACES CURB.

NBU — NEW BRAUNFELS UTILITIES WATER SYSTEMS ENGINEERING | DRAWN BY: H Shadrock | APPROVED BY: | STANDARD DRAWING: **STANDARD INSTALLATION DETAIL FOR 5/8", 3/4" & 1" METER** | UPDATED: 4-16-03 | SCALE: N.T.S. | SHEET: 2 OF 2 | DRAWING NO. 202

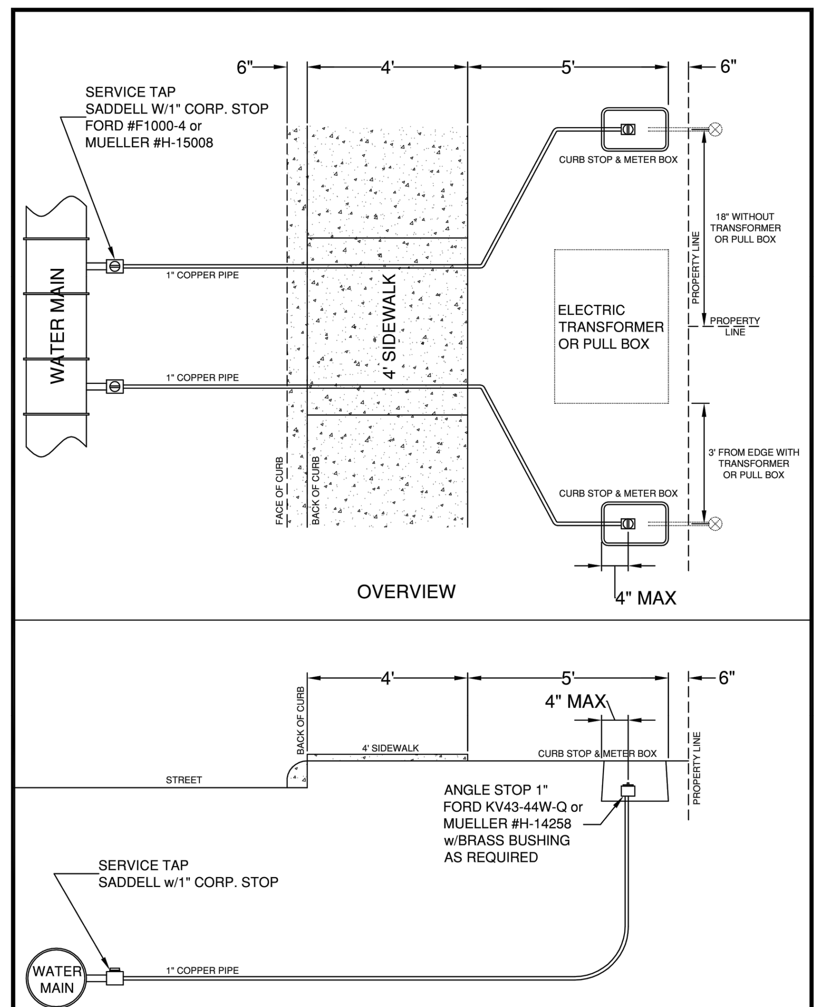

NBU — NEW BRAUNFELS UTILITIES WATER SYSTEMS ENGINEERING | DRAWN BY: H Shadrock | APPROVED BY: | STANDARD DRAWING: **SERVICE TAP: METER BOX PLACEMENT BETWEEN SIDEWALK AND PROPERTY LINE** | UPDATED: 5-5-03 | SCALE: N.T.S. | SHEET: 1 OF 1 | DRAWING NO. 244

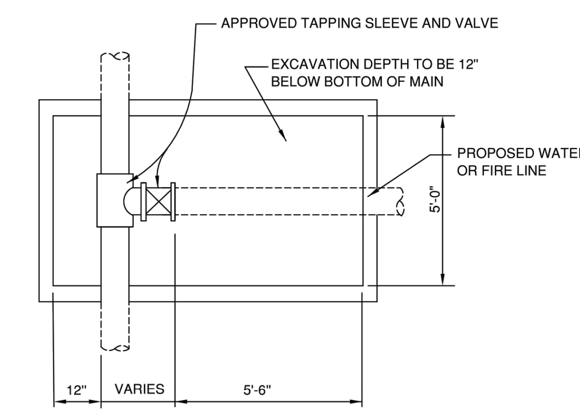

NBU — NEW BRAUNFELS UTILITIES WATER SYSTEMS ENGINEERING | DRAWN BY: H Shadrock | APPROVED BY: | STANDARD DRAWING: **MINIMUM EXCAVATION CLEARANCE FOR INSTALLATION OF PRESSURE TAP** | UPDATED: 4-24-03 | SCALE: N.T.S. | SHEET: 1 OF 1 | DRAWING NO. 222

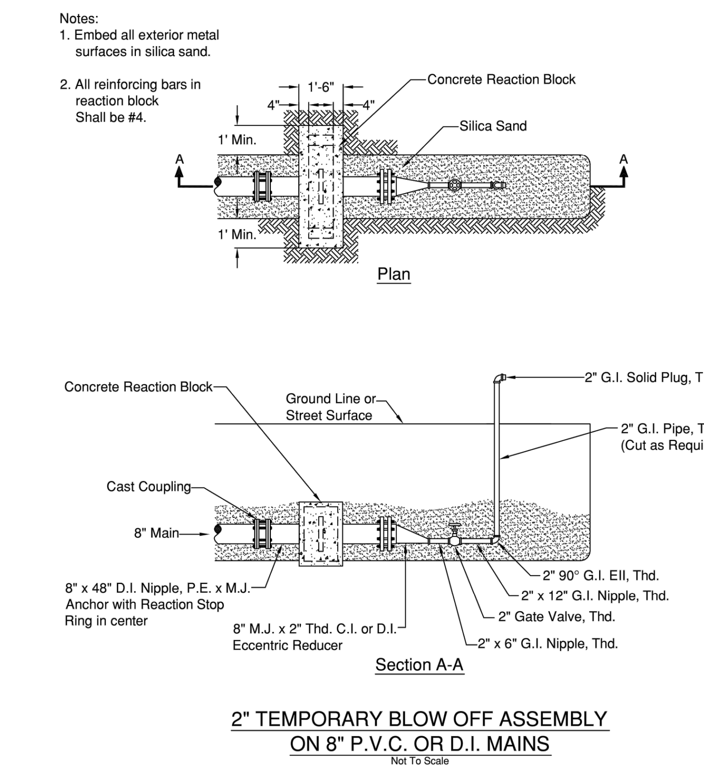

NBU — NEW BRAUNFELS UTILITIES WATER SYSTEMS ENGINEERING | DRAWN BY: JD Amaro | APPROVED BY: | STANDARD DRAWING: **2" TEMPORARY BLOW OFF ASSEMBLY ON 8" P.V.C. OR D.I. MAINS** | UPDATED: 5-6-03 | SCALE: N.T.S. | SHEET: 1 OF 1 | DRAWING NO. 252

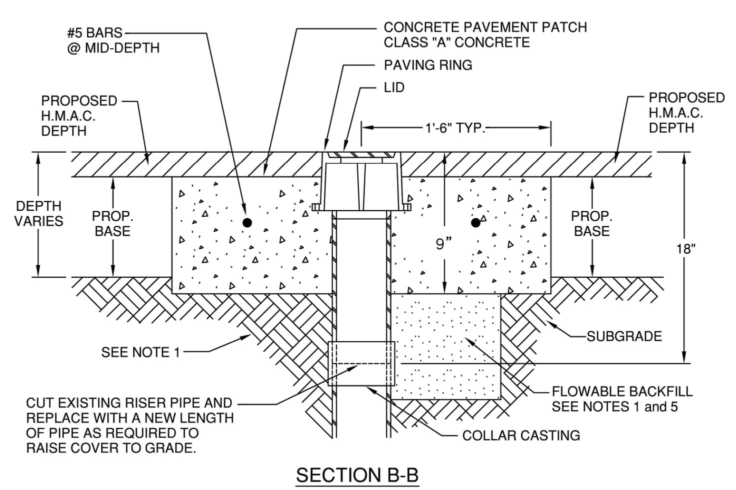

NOTES:

1. SUBGRADE SHALL BE COMPACTED AS PER SPECIFICATIONS.
2. VALVE CASTINGS SHALL BE ADJUSTED TO GRADE AFTER FINAL LIFT OF OVERLAY IS IN PLACE.
3. CLEAN VALVE BOX OF ALL DEBRIS DOWN TO THE BASE OF THE VALVE.
4. REMOVE EXISTING RISER PIPE DOWN 18" AND REPLACE TO THE NEW ELEVATION USING NEW PIPE AND A COLLAR CASTING.
5. WHERE CAST IRON CASTINGS TO BE REMOVED REQUIRE EXCAVATION GREATER THAN 20" DEEP, CONTRACTOR MAY ELECT TO FILL EXCAVATION WITH CONTROLLED LOW STRENGTH MATERIAL TO THE UNDERSIDE OF THE CONCRETE PAVEMENT PATCH IN LIEU OF COMPACTED BACKFILL.
6. REINFORCING STEEL SHALL MEET SPECIFICATIONS.

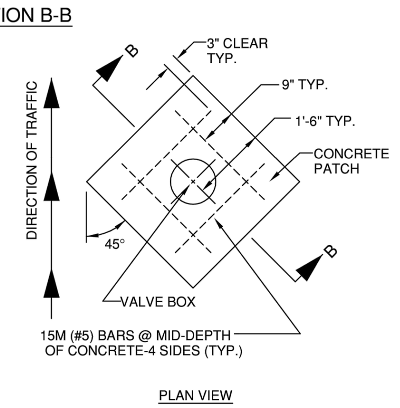

NBU — NEW BRAUNFELS UTILITIES WATER SYSTEMS ENGINEERING | DRAWN BY: JD Amaro | APPROVED BY: | STANDARD DRAWING: **WATER VALVE BOX ADJUSTMENT TO GRADE WITH CONCRETE AND HMAC FOR NEW STREETS** | UPDATED: 4-10-03 | SCALE: N.T.S. | SHEET: 1 OF 1 | DRAWING NO. 233

NOTES:

1. WELD SOCKET 2 1/2" X 2" DEEP TO 1" SCH. 40 ROUND STEM EXTENSION, FITTED ON OPERATING NUT, SCH. 80 FOR LENGTHS OVER 10'.
2. NBU STANDARD VALVE CASTING RING & LID.
3. NUT AT TOP OF VALVE EXTENSION ROD SHALL BE SQUARE 2" LONG WELDED TO TOP OF ROD.

NOTES (CONT.):

4. VALVE EXTENSIONS ARE REQUIRED ON ALL VALVES THAT EXCEED 3' DEEP FROM FINISHED GRADE. VALVE EXTENSIONS SHALL BE PLACED SUCH THAT THE EXTENSION NUT IS BETWEEN 18" AND 24" FROM FINISHED GRADE.

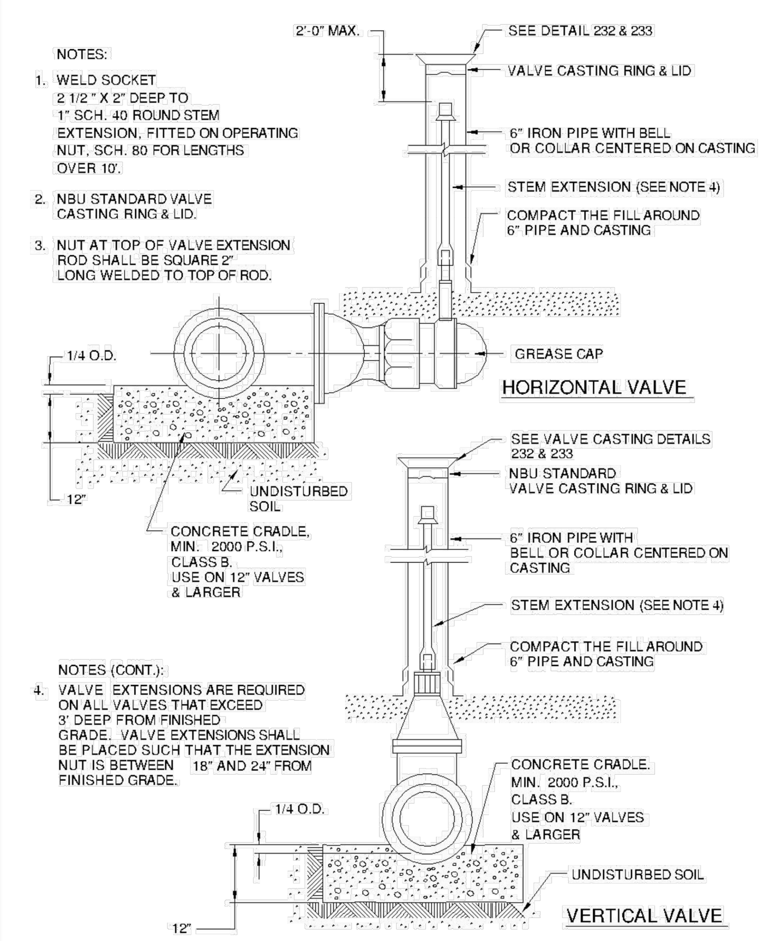

NBU — NEW BRAUNFELS UTILITIES WATER SYSTEMS ENGINEERING | DRAWN BY: H Shadrock | APPROVED BY: | STANDARD DRAWING: **TYPICAL GATE VALVE** | UPDATED: 4-24-03 | SCALE: N.T.S. | SHEET: 1 OF 1 | DRAWING NO. 230

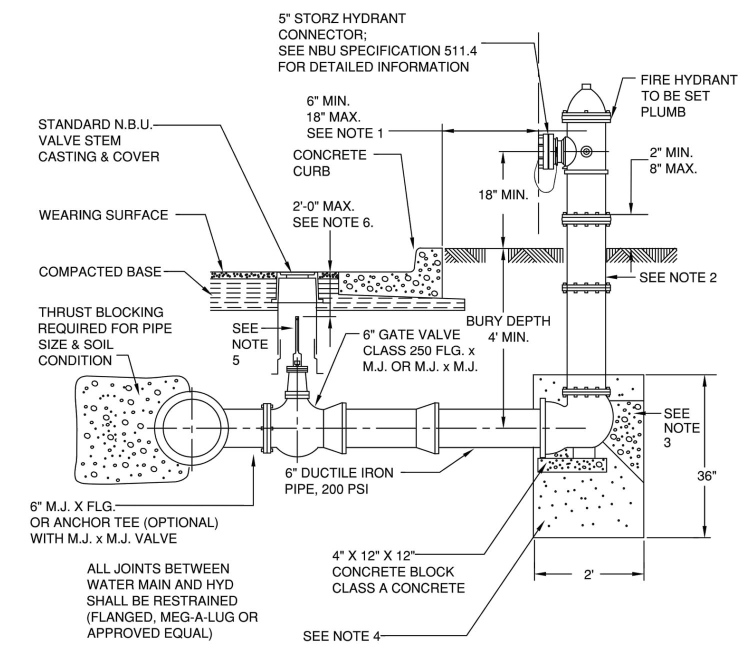

NOTES:

1. DIMENSIONS SHOWN ARE APPLICABLE IN SPACE BETWEEN CURB AND SIDEWALK. WHERE WALK ABUTS CURB, AND IN PUBLIC OR COMMERCIAL AREAS, DIMENSION FROM BACK OF CURB SHALL BE 3' TO 9'. HYDRANTS ARE NOT TO BE PLACED IN SIDEWALK AREAS. SEE NEW BRAUNFELS UTILITIES STANDARD SPECIFICATIONS FOR LOCATION OF HYDRANT.
2. FOR BURY DEPTHS GREATER THAN 5', ONE BARREL EXTENSION NOT EXCEEDING 2' LENGTH SHALL BE INSTALLED DIRECTLY BELOW THE FIRE HYDRANT.
3. CONCRETE BLOCKING WITH A MIN, 1 1/2 FT^2 BEARING AREA. CLASS A CONCRETE. DO NOT BLOCK DRAIN HOLES.
4. CRUSHED STONE OR GRAVEL SHALL BE PLACED AROUND THE BOTTOM OF THE HYDRANT FOR A RADIUS OF AT LEAST 12" AND EXTEND AT LEAST 12" ABOVE THE OUTLET. DO NOT BLOCK DRAIN HOLES.
5. WELD SOCKET 2 1/2" X 2" DEEP TO 1" SCH. 40 ROUND STEM EXTENSION, FITTED ON OPERATING NUT, SCH. 80 FOR LENGTHS OVER 10'.
6. VALVE EXTENSIONS ARE REQUIRED ON ALL VALVES THAT EXCEED 3' DEEP FROM FINISHED GRADE. VALVE EXTENSIONS SHALL BE PLACED SUCH THAT THE EXTENSION NUT IS BETWEEN 18" AND 24" FROM FINISHED GRADE.

NBU — NEW BRAUNFELS UTILITIES WATER SYSTEMS ENGINEERING | DRAWN BY: JD Amaro | APPROVED BY: | STANDARD DRAWING: **STANDARD FIRE HYDRANT INSTALLATION WITH 5" STORZ CONNECTOR** | DRAWING DATE: 4-10-03 | REVISION DATE: 5-22-12 | SCALE: N.T.S. | SHEET: 1 OF 1 | DRAWING NO. 240

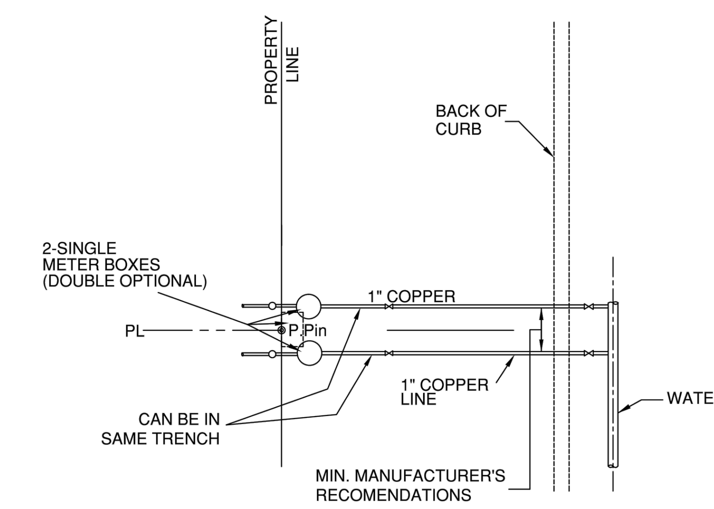

NOTES:

1. STANDARD LOCATIONS WITH NO SIDEWALK OR WHEN SIDEWALK IS NEXT TO CURB
2. END OF SERVICE PIPE TO BE 48" PAST PROPERTY LINE OR IF UNDERGROUND ELECTRIC IS PRESENT IN EASEMENT THEN SERVICE TO END 48" PAST ELECTRIC CONDUIT.

NBU — NEW BRAUNFELS UTILITIES WATER SYSTEMS ENGINEERING | DRAWN BY: H Shadrock | APPROVED BY: | STANDARD DRAWING: **WATER SERVICE CONNECTION DETAIL** | UPDATED: 4-15-03 | SCALE: N.T.S. | SHEET: 1 OF 2 | DRAWING NO. 245

NOTES:

1. UTILITY CONTRACTOR INSTALLS WATER CONNECTION TO MAIN WATER PIPE, FITTINGS AND VALVES INCLUDING STOP VALVE, REFER TO INSTALLATION DETAILS FOR LOCATION OF STOP VALVES. ALL INSTALLATIONS SHALL BE MADE IN ACCORDANCE WITH INFORMATION SHOWN ON APPLICABLE STANDARD DRAWINGS AND WILL BE INSPECTED BY NEW BRAUNFELS UTILITIES (NBU) CONSTRUCTION INSPECTION PERSONNEL.
2. DEVELOPER'S CONTRACTOR TO INSTALL WATER LINES INCLUDING FITTINGS AND VALVES UP TO METER, INSTALL METER BOXES AND COVERS, ALL IN ACCORDANCE WITH INFORMATION ON APPLICABLE STANDARD DRAWING. A VENTED SPACER MAY BE USED TO ASSURE PROPER SPACING AND ALIGNMENT OF METER FITTINGS.
3. DEVELOPER AND/OR CUSTOMER IS RESPONSIBLE FOR METER BOX UNTIL METER IS INSTALLED AND IS CONNECTED. ANY MISSING OR DAMAGED PARTS SHALL BE REINSTALLED BY DEVELOPER/CUSTOMER WHO SHALL GUARANTEE, FOR A PERIOD OF ONE (1) YEAR FROM DATE OF ACCEPTANCE, THAT CONNECTIONS TO SYSTEMS ARE FREE FROM DEFECTS IN WORKMANSHIP OR MATERIALS. DEVELOPER/CUSTOMER ALSO HAS THE RESPONSIBILITY TO ASSURE THAT ALL VALVES AND STOPS, METER BOX AND REMAIN CLEAR OF SIDEWALKS AND OTHER OBSTRUCTIONS.
4. NEW BRAUNFELS UTILITIES (NBU) ACTIVITY IS LIMITED TO INSTALLATION OF THE WATER METER AND INSPECTION OF CONNECTIONS TO NBU'S WATER SYSTEMS. FOR MAINTENANCE PURPOSES, NBU'S RESPONSIBILITY ENDS AT THE CUSTOMER'S SIDE OF THE WATER METER.
5. NO METER BOX SHALL BE SET IN SIDEWALK AREA WITHOUT WRITTEN APPROVAL FROM THE WATER SYSTEMS ENGINEERING DEPARTMENT.

NBU — NEW BRAUNFELS UTILITIES WATER SYSTEMS ENGINEERING | DRAWN BY: H Shadrock | APPROVED BY: | STANDARD DRAWING: **SINGLE WATER SERVICE CONNECTION DETAIL** | UPDATED: 4-15-03 | SCALE: N.T.S. | SHEET: 2 OF 2 | DRAWING NO. 245

ES-007

For Non-Health Hazard Applications

Job Name ______ Contractor ______
Job Location ______ Approval ______
Engineer ______ Contractor's P.O. No. ______
Approval ______ Representative ______

Series 007

Double Check Valve Assemblies

Sizes: ½" – 2"

Series 007 Double Check Valve Assemblies are designed to protect drinking water supplies from dangerous cross-connections in accordance with national plumbing codes and water authority requirements for non-potable service applications such as irrigation, fireline, or industrial processing. Only those cross-connections identified by local inspection authorities as non-health hazard shall be allowed the use of an approved double check valve assembly.

Check with local authority having jurisdiction regarding vertical orientation, frequency of testing or other installation requirements.

The valve shall meet the requirements of ASSE Std. 1015 and AWWA Std. C510. Approved by the Foundation for Cross-Connection Control and Hydraulic Research at the University of Southern California.

1" 007M1QT

1" 007M1QT-S

Features

- Ease of maintenance — only one cover
- Top entry
- Replaceable seats and seat discs
- Modular construction
- Compact design
- Cast bronze body construction — ½" – 2"
- Top mounted ball valve test cocks
- Low pressure drop
- No special tools required for servicing
- ½" – 1" have tee handles

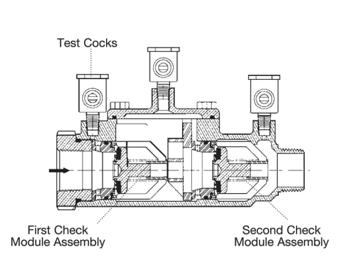

The 007 Series features a modular design concept which facilitates complete maintenance and assembly by retaining the spring load.

Specifications

A Double Check Valve Assembly shall be installed at each noted location. The assembly shall consist of two positive seating check modules with captured springs and rubber seat discs. The check module seats and seat discs shall be replaceable. Service of all internal components shall be through a single bronze or stainless steel access cover secured with stainless steel bolts. The assembly shall also include two resilient seated isolation valves; four top mounted, resilient seated test cocks. The assembly shall meet the requirements of ASSE Std. 1015 and AWWA Std. C510. Approved by the Foundation for Cross-Connection Control and Hydraulic Research at the University of Southern California. Assembly shall be a Watts Series 007.

Now Available
WattsBox Insulated Enclosures.
For more information, send for literature ES-WB.

NOTICE
Inquire with governing authorities for local installation requirements

Watts product specifications in U.S. customary units and metric are approximate and are provided for reference only. For precise measurements, please contact Watts Technical Service. Watts reserves the right to change or modify product design, construction, specifications, or materials without prior notice and without incurring any obligation to make such changes and modifications on Watts products previously or subsequently sold.

WATTS®

Pressure — Temperature

½" – 2"
Temperature Range: 33°F – 180°F (0.5°C – 82°C).
Maximum Working Pressure: 175psi (12.1 bar).

Standards

ASSE Std. 1015, AWWA Std. C510
IAPMO PS31, CSA B64.5

Approvals

† ASSE, AWWA, IAPMO, CSA, UPC
▲ Approved by the Foundation for Cross-Connection Control and Hydraulic Research at the University of Southern California.
• Models LF and S are not listed.
◆ UL Classified (LF models only) ¾" – 2" (except 007M3LF)
* Horizontal and vertical "flow up" approval on all sizes

Suffix:
S - bronze strainer
LF - without shutoff valves
SH - stainless steel ball valve handles
HC - 2½" inlet/outlet fire hydrant fittings (2" valve)
Prefix:
U - Union connections

Dimensions – Weights

Models

Sizes: ½" – 2"

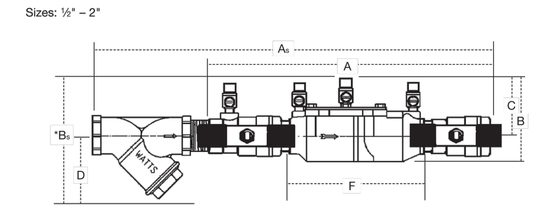

*Subscript 'S' = strainer model

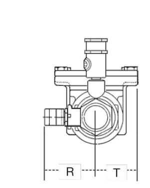

MODEL	SIZE	A		B		C		D		F		G		R		T		WEIGHT	
	in.	in.	mm	in.	mm	in.	mm	in.	mm	in.	mm	in.	mm	in.	mm	in.	mm	lbs.	kgs.
†▲ 007QT	½	10	254	4⅝	117	2⁷⁄₁₆	62	—	—	5	127	3⅜	85	2⁵⁄₁₆	59	2¹⁄₁₆	52	4.5	2
†▲ 007M3QT	¾	11⅛	282	4	102	3⅛	79	—	—	6³⁄₁₆	157	3⁷⁄₁₆	87	2⅛	54	¹⁵⁄₁₆	33	5	2.3
†▲ 007M1QT	1	13¼	337	5⅛	130	4	102	—	—	7½	191	3⅜	85	1¹¹⁄₁₆	43	1¹¹⁄₁₆	43	12	5.4
†▲ 007M2QT	1¼	16⅜	416	5	127	3⁵⁄₁₆	84	—	—	9½	241	5	127	3	76	2	50	15	6.8
†▲ 007M2QT	1½	16¾	425	4⅞	124	3½	89	—	—	9¾	248	5¹³⁄₁₆	148	3⅛	79	2¹¹⁄₁₆	68	15.9	7.2
†▲ 007M1QT	2	19½	495	6¼	159	4	102	—	—	13⅜	340	6⅛	156	3⁷⁄₁₆	87	2¹¹⁄₁₆	68	25.7	11.7
• 007QT-S	½	13	330	6	152	2⁷⁄₁₆	62	3	76	5	127	3⅜	85	2⁵⁄₁₆	59	2¹⁄₁₆	52	5.5	2.5
• 007M3QT-S	¾	14½	368	6⅛	156	3⅛	79	3	76	6³⁄₁₆	157	3⁷⁄₁₆	87	2⅛	54	¹⁵⁄₁₆	33	6.7	3.1
• 007M1QT-S	1	17¹⁵⁄₁₆	157	7¾	197	4	102	3¼	83	7½	191	3⅜	85	1¹¹⁄₁₆	43	1¹¹⁄₁₆	43	14	6.4
• 007M2QT-S	1¼	21½	546	7¹⁄₁₆	179	3⁵⁄₁₆	84	3½	83	9½	241	5	127	3	76	2	50	19	8.6
• 007M2QT-S	1½	25¹⁄₁₆	637	7¹⁄₁₆	179	3½	89	3¾	95	9¾	248	5¹³⁄₁₆	148	3⅛	79	2¹¹⁄₁₆	68	19.6	8.9
• 007M1QT-S	2	27¼	692	8¾	222	4	102	4	102	13⅜	340	6⅛	156	3⁷⁄₁₆	87	2¹¹⁄₁₆	68	33.5	15.2

Suffix HC — Fire Hydrant Fittings dimension "A" = 23½" (594mm)

Dimensions – Weights

1" U007M1QT

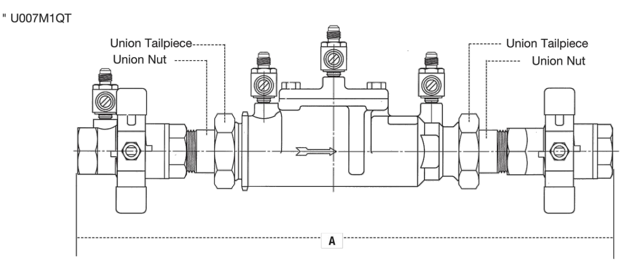

Sizes: ½" – 2"

MODEL	SIZE	DIMENSIONS A	
	in.	in.	mm
U007QT	½	12¹³⁄₁₆	326
U007M2QT	¾	13¹³⁄₁₆	350
U007M2QT	1	16⅝	422
U007M2QT	1¼	20¾	527
U007M2QT	1½	21½	546
U007M1QT	2	24½	622

290 S. CASTELL AVE., STE. 100
NEW BRAUNFELS, TX 78130
TBPE FIRM F-10961
TBPLS FIRM 1053600
HMT ENGINEERING & SURVEYING

THIS DOCUMENT IS RELEASED FOR THE PURPOSE OF INTERIM REVIEW UNDER THE AUTHORITY OF CHRISTOPHER P. VAN HEERDE P.E. # 93047 ON 6/3/20. IT IS NOT TO BE USED FOR CONSTRUCTION, BIDDING OR PERMIT PURPOSES.

Chris Van Heerde, P.E.

WATER DETAILS

VILLAGE AT GRUENE CONDOMINIUMS

NO.	REVISION DESCRIPTION	REVISION DATE

DATE: APRIL 2020
DRAWN BY: LB
DESIGNED BY: HC
REVIEWED BY: SWH–CVH
HMT PROJECT NO.: 170.004

SHEET
C9.2 PI

Drawing Name: N:_Projects\170 – James Japhet\170.004 – Villages at Gruene Garden Homes\CDs\City Permit\170.004_DETL.dwg User: robertb Jun 03, 2020 – 5:04pm

GENERAL NOTES

1. FLAGS ATTACHED TO SIGNS WHERE SHOWN, ARE REQUIRED.
2. ALL TRAFFIC CONTROL DEVICES ILLUSTRATED ARE REQUIRED, EXCEPT THOSE DENOTED WITH THE TRIANGLE SYMBOL MAY BE OMITTED WHEN STATED ELSEWHERE IN THE PLANS, OR FOR ROUTINE MAINTENANCE WORK, WHEN APPROVED BY THE ENGINEER.
3. THE DOWNSTREAM TAPER IS OPTIONAL. WHEN USED, IT SHOULD BE 100 FEET MINIMUM LENGTH PER LANE.
4. FOR SHORT TERM APPLICATIONS, WHEN POST MOUNTED SIGNS ARE NOT USED, THE DISTANCE LEGEND MAY BE SHOWN ON THE SIGN FACE RATHER THAN ON A CW16–3AP SUPPLEMENTAL PLAQUE.
5. A SHADOW VEHICLE WITH A TMA SHOULD BE USED ANYTIME IT CAN BE POSITIONED 30 TO 100 FEET IN ADVANCE OF THE AREA OF CREW EXPOSURE WITHOUT ADVERSELY AFFECTING THE PERFORMANCE OR QUALITY OF THE WORK. IF WORKERS ARE NO LONGER PRESENT BUT ROAD OR WORK CONDITIONS REQUIRE THE TRAFFIC CONTROL TO REMAIN IN PLACE, TYPE 3 BARRICADES OR OTHER CHANNELIZING DEVICES MAY BE SUBSTITUTED FOR THE SHADOW VEHICLE AND TMA.
6. ADDITIONAL SHADOW VEHICLES WITH TMAS MAY BE POSITIONED IN EACH CLOSED LANE, ON THE SHOULDER OR OFF THE PAVED SURFACE, NEXT TO THOSE SHOWN IN ORDER TO PROTECT A WIDER WORK SPACE.
7. ADVANCED WARNING SIGNS WILL REMAIN IN PLACE DURING THE DURATION OF THE DEVELOPMENT CONSTRUCTION FOR ADDITIONAL CONSTRUCTION VEHIVLE TRAFFIC ENETERING AND EXITING THE DEVELOPMENT SITE,

TCP (2–4a)

8. IF THIS TCP IS USED FOR A LEFT LANE CLOSURE, CW20–5TL "LEFT LANE CLOSED"SIGNS SHALL BE USED AND CHANNELIZING DEVICES SHALL BE PLACED ON THE CENTERLINE TO PROTECT THE WORK SPACE FROM OPPOSING TRAFFIC WITH THE ARROW BOARD PLACED IN THE CLOSED LANE NEAR THE END OF THE MERGING TAPER.

LEGEND

	TYPE 3 BARRICADE		CHANNELIZING DEVICES
	HEAVY WORK VEHICLE		TRUCK MOUNTED ATTENUATOR (TMA)
	TRAILER MOUNTED FLASHING ARROW BOARD		PORTABLE CHANGEABLE MESSAGE SIGN (PCMS)
	SIGN		TRAFFIC FLOW
	FLAG		FLAGGER

POSTED SPEED *	FORMULA	MINIMUM DESIRABLE TAPER LENGTHS **			SUGGESTED MAXIMUM SPACING OF CHANNELIZING DEVICES		MINIMUM SIGN SPACING "X" DISTANCE	SUGGESTED LONGITUDINAL BUFFER SPACE "B"
		10' OFFSET	11' OFFSET	12' OFFSET	ON A TAPER	ON A TANGENT		
30	$L=\frac{WS^2}{60}$	150'	165'	180'	30'	60'	120'	90'
35		205'	225'	245'	35'	70'	160'	120'
40		265'	295'	320'	40'	80'	240'	155'
45	L=WS	450'	495'	540'	45'	90'	320'	195'
50		500'	550'	600'	50'	100'	400'	240'
55		550'	605'	660'	55'	110'	500'	295'
60		600'	660'	720'	60'	120'	600'	350'
65		650'	715'	780'	65'	130'	700'	410'
70		700'	770'	840'	70'	140'	800'	475'
75		750'	825'	900'	75'	150'	900'	540'

* CONVENTIONAL ROADS ONLY
** TAPER LENGTHS HAVE BEEN ROUNDED OFF.
L=LENGTH OF TAPER(FT) W=WIDTH OF OFFSET(FT) S=POSTED SPEED(MPH)

LEGEND

LIMITS OF WORK SPACE

0 50 100
SCALE: 1" = 100'

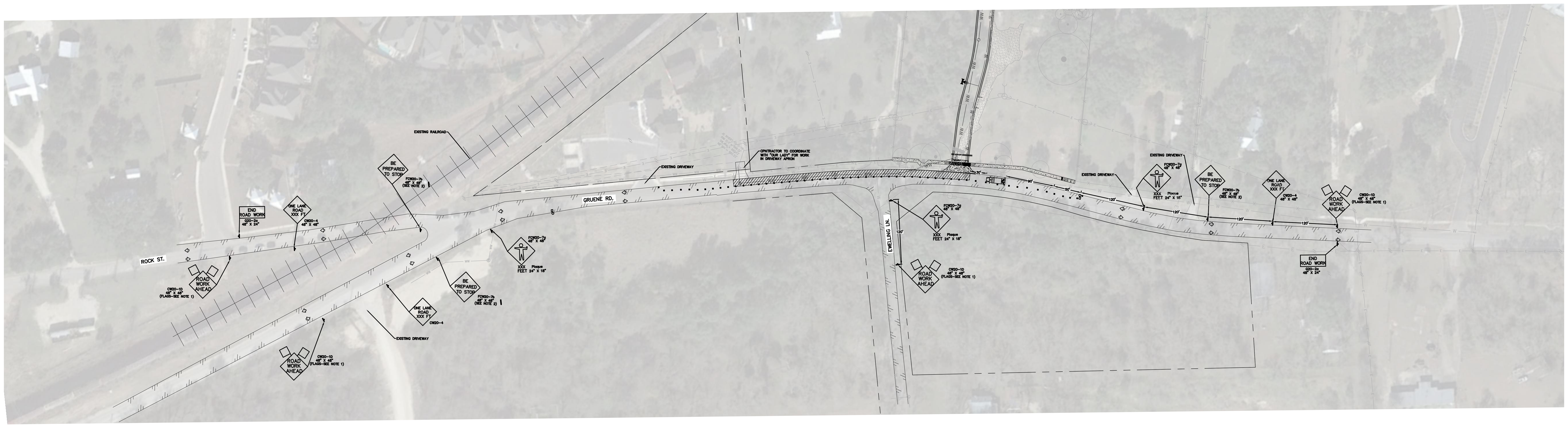

290 S. CASTELL AVE., STE. 100
NEW BRAUNFELS, TX 78130
TBPE FIRM F-10961
TBPLS FIRM 1053600

HMT
ENGINEERING & SURVEYING

THIS DOCUMENT IS RELEASED FOR THE PURPOSE OF INTERIM REVIEW UNDER THE AUTHORITY OF CHRISTOPHER P. VAN HEERDE P.E. # 93047 ON 6/3/20. IT IS NOT TO BE USED FOR CONSTRUCTION, BIDDING OR PERMIT PURPOSES.

Chris Van Heerde, P.E.

TRAFFIC CONTROL PLAN

VILLAGE AT GRUENE CONDOMINIUMS

NO.	REVISION DESCRIPTION	REVISION DATE

DATE: JUNE 2020
DRAWN BY: LB
DESIGNED BY: HC
REVIEWED BY: SWH–CVH
HMT PROJECT NO.: 170.004

SHEET
C10.1 PI

Drawing Name: N:_Projects\170 – James Japhet\170.004 – Villages at Gruene Garden Homes\CDs\City Permit\170.004_TCP.dwg User: robertb Jun 03, 2020 – 5:05pm

DISCLAIMER: The use of this standard is governed by the "Texas Engineering Practice Act". No warranty of any kind is made by TxDOT for any purpose whatsoever. TxDOT assumes no responsibility for the conversion of this standard to other formats or for incorrect results or damages resulting from its use.

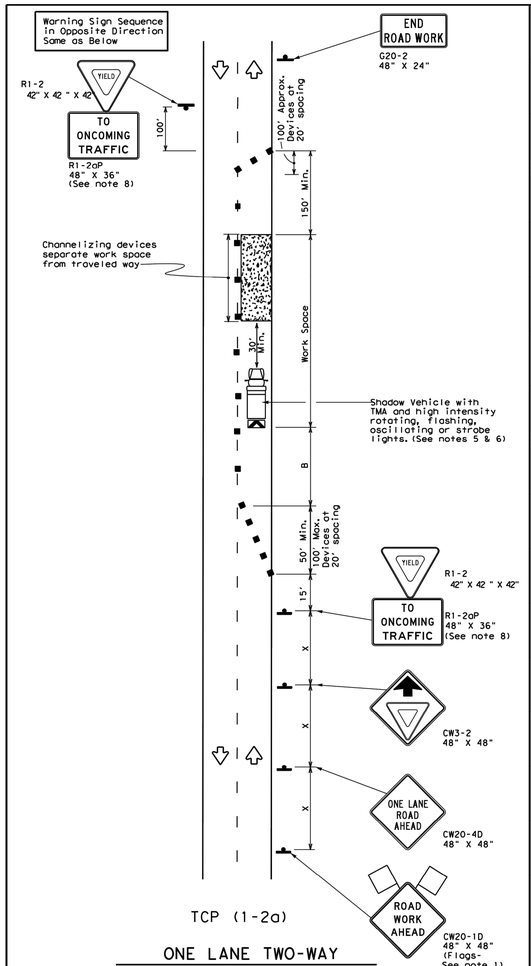

TCP (1-2a)

ONE LANE TWO-WAY CONTROL WITH YIELD SIGNS

(Less than 2000 ADT - See note 7)

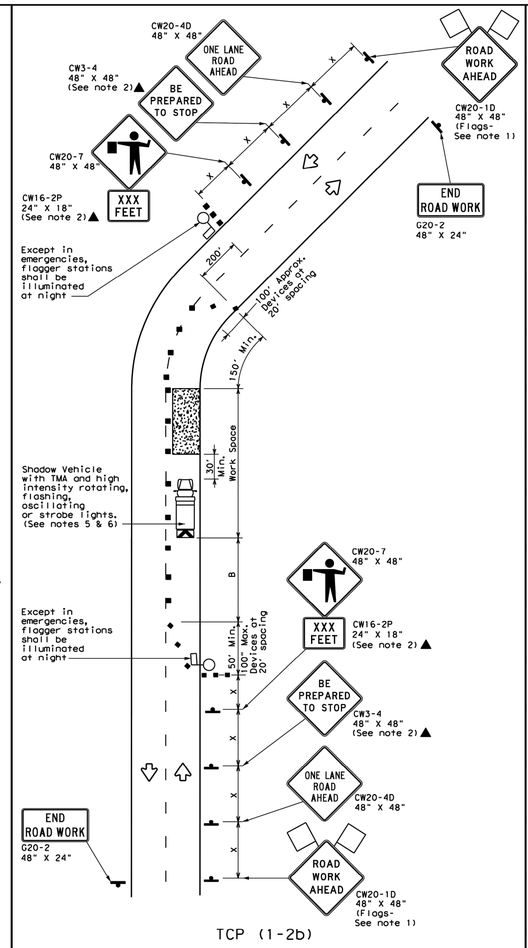

TCP (1-2b)

ONE LANE TWO-WAY CONTROL WITH FLAGGERS

LEGEND

	Type 3 Barricade		Channelizing Devices
	Heavy Work Vehicle		Truck Mounted Attenuator (TMA)
	Trailer Mounted Flashing Arrow Board	M	Portable Changeable Message Sign (PCMS)
	Sign		Traffic Flow
	Flag		Flagger

Posted Speed *	Formula	Minimum Desirable Taper Lengths ** 10' Offset	11' Offset	12' Offset	Suggested Maximum Spacing of Channelizing Devices On a Taper	On a Tangent	Minimum Sign Spacing "X" Distance	Suggested Longitudinal Buffer Space "B"	Stopping Sight Distance
30	$L=\frac{WS^2}{60}$	150'	165'	180'	30'	60'	120'	90'	200'
35		205'	225'	245'	35'	70'	160'	120'	250'
40		265'	295'	320'	40'	80'	240'	155'	305'
45	L=WS	450'	495'	540'	45'	90'	320'	195'	360'
50		500'	550'	600'	50'	100'	400'	240'	425'
55		550'	605'	660'	55'	110'	500'	295'	495'
60		600'	660'	720'	60'	120'	600'	350'	570'
65		650'	715'	780'	65'	130'	700'	410'	645'
70		700'	770'	840'	70'	140'	800'	475'	730'
75		750'	825'	900'	75'	150'	900'	540'	820'

* Conventional Roads Only
** Taper lengths have been rounded off.
L=Length of Taper(FT) W=Width of Offset(FT) S=Posted Speed(MPH)

TYPICAL USAGE

MOBILE	SHORT DURATION	SHORT TERM STATIONARY	INTERMEDIATE TERM STATIONARY	LONG TERM STATIONARY
	✓	✓		

GENERAL NOTES

1. Flags attached to signs where shown are REQUIRED.
2. All traffic control devices illustrated are REQUIRED, except those denoted with the triangle symbol may be omitted when stated elsewhere in the plans, or for routine maintenance work, when approved by the Engineer.
3. The CW3-4 "BE PREPARED TO STOP" sign may be installed after the CW20-4D "ONE LANE ROAD AHEAD" sign, but proper sign spacing shall be maintained.
4. Sign spacing may be increased or an additional CW20-1D "ROAD WORK AHEAD" sign may be used if advance warning ahead of the flagger or R1-2 "YIELD" sign is less than 1500 feet.
5. A Shadow Vehicle with a TMA should be used anytime it can be positioned 30 to 100 feet in advance of the area of crew exposure without adversely affecting the performance or quality of the work. If workers are no longer present but road or work conditions require the traffic control to remain in place, Type 3 Barricades or other channelizing devices may be substituted for the Shadow Vehicle and TMA.
6. Additional Shadow Vehicles with TMAs may be positioned off the paved surface, next to those shown in order to protect wider work spaces.

TCP (1-2a)

7. R1-2 "YIELD" sign traffic control may be used on projects with approaches that have adequate sight distance. For projects in urban areas, work spaces should be no longer than one half city block. In rural areas on roadways with less than 2000 ADT, work spaces should be no longer than 400 feet.
8. R1-2 "YIELD" sign with R1-2aP "TO ONCOMING TRAFFIC" plaque shall be placed on a support at a 7 foot minimum mounting height.

TCP (1-2b)

9. Flaggers should use two-way radios or other methods of communication to control traffic.
10. Length of work space should be based on the ability of flaggers to communicate.
11. If the work space is located near a horizontal or vertical curve, the buffer distances should be increased in order to maintain adequate stopping sight distance to the flagger and a queue of stopped vehicles (see table above).
12. Channelizing devices on the center-line may be omitted when a pilot car is leading traffic and approved by the Engineer.
13. Flaggers should use 24" STOP/SLOW paddles to control traffic. Flags should be limited to emergency situations.

For construction or maintenance contract work, specific project requirements for shadow vehicles can be found in the project GENERAL NOTES for Item 502, Barricades, Signs and Traffic Handling.

Texas Department of Transportation
Traffic Operations Division

TRAFFIC CONTROL PLAN
ONE-LANE TWO-WAY
TRAFFIC CONTROL

TCP(1-2)-12

© TxDOT December 1985 | DN: TxDOT | CK: TxDOT | DW: TxDOT | CK: TxDOT

REVISIONS	CONT	SECT	JOB	HIGHWAY
4-90 2-12				
2-94				
1-97	DIST		COUNTY	SHEET NO.
4-98				

152

DATE:
FILE:

HMT ENGINEERING & SURVEYING
290 S. CASTELL AVE., STE. 100
NEW BRAUNFELS, TX 78130
TBPE FIRM F-10961
TBPLS FIRM 10536000

THIS DOCUMENT IS RELEASED FOR THE PURPOSE OF INTERIM REVIEW UNDER THE AUTHORITY OF CHRISTOPHER P. VAN HEERDE P.E. # 93047 ON 6/3/20. IT IS NOT TO BE USED FOR CONSTRUCTION, BIDDING OR PERMIT PURPOSES.

TRAFFIC CONTROL DETAILS

VILLAGE AT GRUENE CONDOMINIUMS

NO.	REVISION DESCRIPTION	REVISION DATE

DATE: JUNE 2020
DRAWN BY: LB
DESIGNED BY: HC
REVIEWED BY: SWH–CVH
HMT PROJECT NO.: 170.004

SHEET
C10.2 PI

Drawing Name: N:_Projects\170 - James Jophek\170.004 - Villages at Gruene Garden Homes\CDs\City Permit\170.004_TCP.dwg User: robertb Jun 03, 2020 - 5:05pm